Kumwell



2024

Grounding & Lightning Protection System

Product Catalog

Kumwell



2024

Grounding & Lightning Protection System

Product Catalog

LPS01/2024

Vision & Mission

A lightning strike or lightning bolt is a natural disaster that can cause enormous damage to our lives, properties, buildings, and various operating systems. As our world today is a modern society in adopting and integrating information and communication technologies at home, we need stability and high security to the electronics system which can prevent lightning strikes and electromagnetic waves that pose a threat to the operating system.

Vision

Leader in Total Solution in Lightning Protection System and Safety Innovation with the Strongest Global Brand and Sustainable Growth.

Mission

- **Create value of products and services to ensure customer satisfaction.**
- **Research and develop innovation to meet the market demand.**
- **Create soft power engagement by using sustainable goals with stakeholders under the Safety to Society – CSV (Creating Shared Value) project.**
- **Develop a management system toward high-performance organization.**
- **Support human assets by creating learning culture for lifelong learning.**

Kumwell Corporation Public Company Limited operates as a manufacturer and distributor of Grounding systems such as ground rod, exothermic welding, more effective grounding (MEG), concrete inspection pit, etc. Lightning system such as air terminal, clamp connections, etc. Surge protection system, Lightning detection and warning system, and safety innovation. We have reached the national and international standards to serve security for people's lives, assets and operating systems in all sectors, especially in the electricity sector (generating system, transmission system, distribution system, solar power plant wind power plants, etc.), the transportation sector (high-speed trains, electric trains, subways, airports, ports, expressways, expressways, etc.), the telecommunication sector (radio stations, television stations, mobile phone transmission station, data center, etc.) industrial sector (Petrochemical plant oil refinery steel mills, automobiles, electronics, farms, etc.), office, residential sectors including the security sector (arsenals, radar stations, etc.) We are proud to introduce our innovations to reduce the risk of electromagnetic and lightning damage under the name "Kumwell" guarantee from 40 countries around the world exportation and distribution.

Quality Assurance

Our company is concerned for every step starting with the design (Pattern and production process), the right material, mechanical strength and lightning resistance test as well as being resistant to weather conditions. We take into consideration the safety of people when installing and using our product

We are committed to providing high-quality products which is an important element to the efficient and effective system work. There are product policies that have to be tested and certified according to international standards UL, IEEE, IEC and Thai Industrial Standards (TIS), especially products in lightning protection systems; it must comply with the international standard IEC 62561, which can be divided into 8 sections according to the type of products.

1. Requirements for connection components
2. Requirements for conductors and earth electrodes
3. Requirements for isolating spark gaps (ISG)
4. Requirements for conductor fasteners
5. Requirements for earth electrode inspection housings and earth electrode seals
6. Requirements for lightning strike counters (LSC)
7. Requirements for earthing enhancing compounds
8. Requirements for components for isolated LPS



ISO/IEC 17025-2017
(Certificate Laboratory Accreditation)



Kumwell Test Report
(IEC 62561)



DEKRA Test Certificate
(IEC 62561)



VDE Test Certificate
(IEC 61643)



UL Test Certificate
(UL 467, UL 486)



UL Inspection Type R Service Report
(For UL Listed)

To comply with the standards in order to deliver quality products, the company therefore constructed a testing laboratory (Kumwell Laboratory), as a testing room for grounding equipment, lightning protection device, surge protection device and lightning alarm devices which was completed in 2013. Our laboratory is the one and only in Southeast Asia and has been accredited for the competence of the testing laboratory according to TIS 17025 - 2561 (ISO/IEC 17025: 2017) for the general requirements in the competence of testing and calibration laboratories in the electrical field, which is recognized by the ILAC organization (International Laboratory Accreditation Cooperation) in equivalent academic ability and able to perform tests by issuing a product test certificate (Test Report) to certify that Kumwell only provide high quality products.

Quality Assurance

Kumwell Laboratory can perform tests according to IEC 62561 and TIS 3024 standards such as Tensile Test, Electrical Resistivity Test, Load Test, Bending Test, Lightning Impulse Current / Surge Current, Environmental Test. Moreover, it is able to test equipment according to various standards such as UL. 467: Grounding and Bonding Equipment, IEC 61643: Low-Voltages Surge Protective Device (SPD).



High Lightning Impulse Current Generator
10/350 µs & 8/20 µs



High Lightning Impulse Current
Combine Generator 8/20 µs

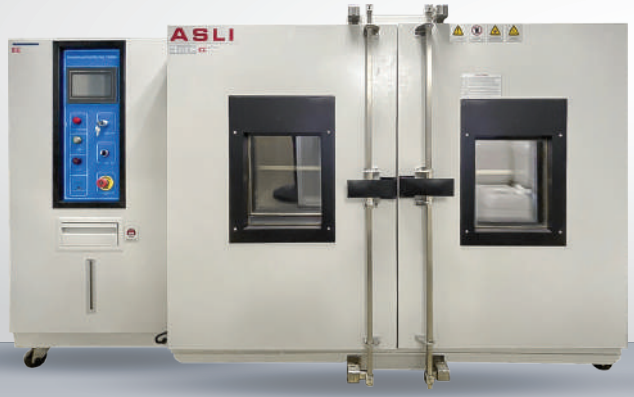

TEMPERATURE (HUMIDITY) Test Chamber



SULFUR DIOXIDE Test Chamber



SALT SPRAY Test Chamber

- High lightning impulse current generator for Grounding system component & Lightning protection system components (LPSC) according to IEC 62561.
- Surge impulse current generator for Surge protect ive device (SPD) according to IEC 61643.
- Environment test chamber (Temperature / Humidity / Sulphur dioxide / Salt spray) for Grounding system component & LPSC according to IEC 62561.
- Universal mechanical testing machine (Tensile / Compressive) for Grounding system component & LPSC according to IEC 62561.

Quality Assurance

In addition, we intend to deliver high-quality system work that is user-friendly and worth the investment besides we create a system that is efficient and completely safe.

• TOOLS & INSTRUCTION: Develop products and installation tools that are easy to install such as ground rod driving hammer, conductor strengthener machines, 4P concrete inspection pits, etc.



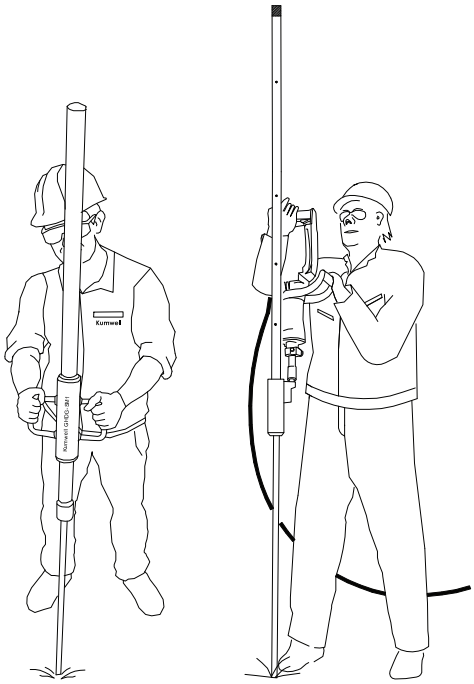

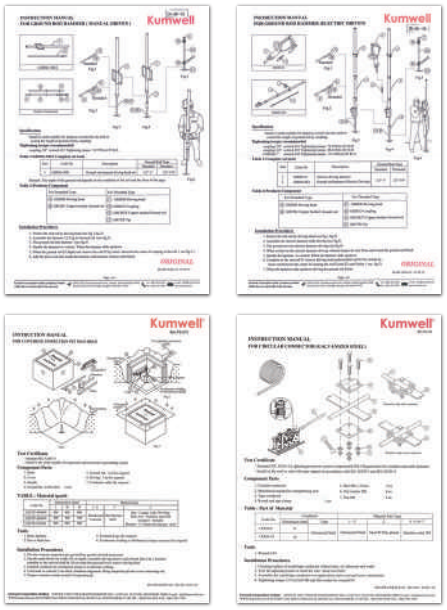

• INSTALL & DESIGN GUIDE: Provide manuals and installation guides through various channels such as seminars to deliver knowledge; the Kumwell Metaverse Academy, Youtube Channel: Kumwell Official, on Facebook Page: Kumwell Official and Kumwell Brand, etc.





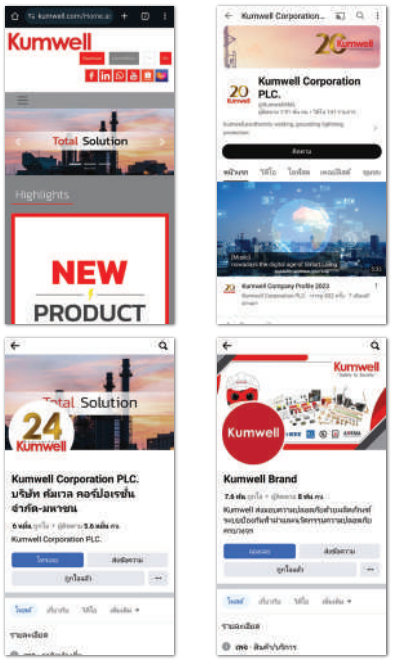

Research & Development

Kumwell Corporation Public Limited Company invests in a Lightning Research Center to research and develop products of lightning protection and grounding systems including lightning detection and data processing systems. The Target of the center is to deliver quality products certified for both Thai and international standard and pay attention to the safety of users Leads to truly efficient and effective system work.

According to the risks to the safety of people and property that may be affected by electromagnetic fields and various interference waves, the investment in creating an Electromagnetic Compatibility Excellent Center (EMC Excellent Center) is done for research and academic cooperation with various agencies both within the country and abroad in order to expand the knowledge towards creating safety innovations for the social sector.

Kumwell
Lightning
Research Center

Lightning Research Center (LRC)

Vision

1. To be a lightning research center that has the potential to strive for sustainable excellence.
2. Become the center of a research network for exchanging knowledge on lightning systems both domestically and abroad.
3. Create innovations regarding lightning protection and lightning warning.

Kumwell
EMC
Excellent Center

Electromagnetic Compatibility Excellent Center (EMCEC)

Vision

1. To be an excellent center focusing on EMC activities.
2. To drive innovation with high speed based on EMC standards and related certifications.
3. To be a EMC networking and provide EMC solutionsand service to all sectors

Innovation

Kumwell committed to research and development of products and innovations continuously and also creating collaborations with networks, partners and customers leading to the trial use and proven Technology.

Smart Lightning Management System (SLMS)



It is a smart innovation that can monitor the overall working status of the lightning protection system, the grounding system and the surge protection system. It can provide instant warning of threats from lightning and various electromagnetic fields to ensure the safety in life, working areas and public areas and to reduce damage.

The information will be report via Web User Interface (Client) and will be sent to the controller or central control system so it can be analyzed, examined, evaluated in order to formulate proactive maintenance measures and methods for the lightning protection system to be in perfect condition and ready to use at all times which have already been sold and installed for actual use, such as

- PTT Stadium
- PTT gas control station
- Srinagarind Dam (Characteristics of Dam & Power Plant)
- Joint research project with Electricity Generating Authority of Thailand Ubol Ratana Dam, Khon Kaen Province








Innovation

Smart Lightning Warning System (SLWS)

The company has invested in lightning detection networks throughout Thailand and some parts of the ASEAN region and has researched, developed an outstanding lightning alarm innovation until being widely accepted.

Lightning detection network is a system that uses data from two types of IOT Sensors (High-Precision Lightning Detection Network System and E-Field Sensor). They are analyzed and processed together via the intelligent Alarm Viewer Software to alert with more than 95% accuracy. It is suitable for different types of projects in the field such as golf courses, power plants, oil refineries, mine area, airport, port, amusement park, school, etc., which has already been sold and installed for actual use, such as

- Bangkok Patana School
- PTT Stadium
- PTT Global Chemical (PTTGC)
- International School Ho Chi Minh City (ISHCMC)
- Joint research project with Electricity Generating Authority of Thailand Ubol Ratana Dam, Khon Kaen Province

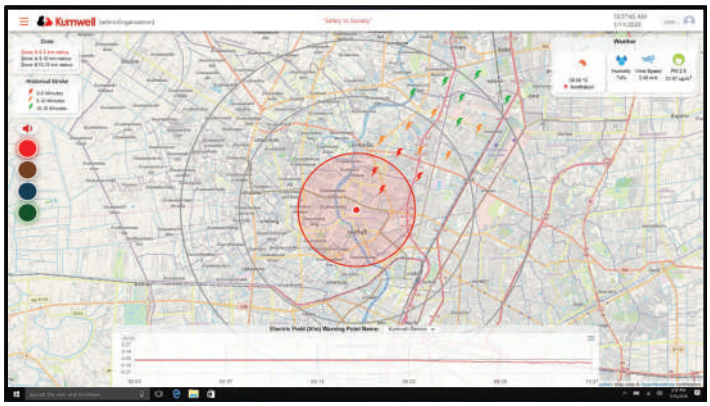







Awards

SET Awards 2022

Received the Best Company Performance Awards in SET Awards 2022 in the category of Business Excellence for information disclosure and quality of financial statements and Sustainability Excellence in the Thai capital market's prestigious awards ceremony 2022 (SET Awards 2022) which emphasizes the strength of policies and effective business practices. Best Company Performance Awards by the Stock Exchange of Thailand (SET) is an award given to listed companies with excellent performance in each group based on business performance, good corporate governance and compliance with the regulations of the Stock Exchange of Thailand.



Best CEO Awards

Best Company Performance Awards





Asia Pacific Enterprise Award (APEA) 2023

Kumwell Corporation PLC., led by Mr. Boonsak Kiatjaroonlert, CEO Received two major international awards, including the Master Entrepreneur Award, as a leader with determination and success in driving the organization to the point of creating continuous business growth. And the Corporate Excellent Award, which is an award given to organizations that have outstanding performance in management and business growth from the Asia Pacific Enterprise Award (APEA) stage. Both of these awards It is supported by Asia Pacific Enterprise aims to band leading entrepreneurs and organisations across Asia to spur greater innovation, fair practices and growth in entrepreneurship, creating a successful entrepreneurial ecosystem which will then shape Asia to sustainable economic and social growth. It can be considered an award of pride and reinforces the image of success and readiness to deliver safety to society in a sustainable way.







Sustainability

Kumwell Corporation Public Company Limited is committed to conducting business by integrating with sustainability management by adopting an international approach to setting strategies and driving the organization to meet the needs and expectations of stakeholders throughout the Value chain for more than 10 years includes:



ESG risk consists of 3 aspects: environmental, social and governance. The company sets goals and action plans in each aspect for example;

E: Environmental

- Invest in Solar Power, a clean alternative energy source instead of using thermal energy from gas which can cause greenhouse gasses.
- Invested in a Zero Liquid Discharge wastewater treatment system to eliminate effluents and reuse water from industrial processes.

S: Social

- Collaborate with the Council of Engineers to deliver knowledge and expertise on electromagnetic disaster risk reduction under Kumwell Academy.
- Create activities to deliver knowledge and help strengthen local economy such as the policy to employ people in the community nearby, organize training and practice financial management knowledge with Noburo, etc.

G: Governance

To emphasize the efficient and effective in corporate governance practices of the company;

- Received prestigious SET Awards 2022, Asia Pacific Enterprise Awards (APEA) 2023
- Setting up a sustainability, a risk management, and a good corporate governance committee, etc.

SDGs - Sustainable Development Goals

There are 17 goals, divided into 5 dimensions: the environment dimension (Planet), the social dimension (People), the economic dimension (Prosperity), the peace and institute dimension (Peace), and the development partnership dimension (Partnership). Our company has set goals and dimensions as follows



- **Planet dimension** 13th goal: Climate Action
  - Propose solutions for disasters caused by electromagnetic waves such as lightning under 3rd approach: CSV.

- **Prosperity dimension** 11th goal: Sustainable cities and communities
  - MOU with various agencies in Research and development to create safety innovations for reducing disasters caused by electromagnetic waves.

- **People dimension** 4th goal: Quality Education
  - Kumwell has developed the value of human assets, both corporate inside and outside

Sustainability

CSV - Creating Shared Value is a way to drive value to society and business sector to achieve stable and sustainable growth. Kumwell has operated through the sustainability commitment "CSV - Safety to Society" project for more than 10 years in delivering knowledge and expertise to reduce life, property, and operating systems in all sectors damage and extending to cooperation with partners networks and clients such as

- Collaborate with the Council of Engineers under the project Kumwell Academy to upgrade the engineering profession and deliver safety to society.
- Sign a Memorandum of Understanding (MOU) with government and private agencies on lightning protection and safety innovations. In the test installation and create innovation to increase efficiency and effectiveness in the operating system. Reduce the risk of electromagnetic waves. Along with certifying the use of products (Proven Technology).
- Join the education sector to create an Engineering curriculum, system design handbook, and installation guide.
- Collaborate with the Thai Electrical and Mechanical Contractors Association (TEMCA) to implement a project "TEMCA Corporate Creating Shared Value (TEMCA C CSV)".

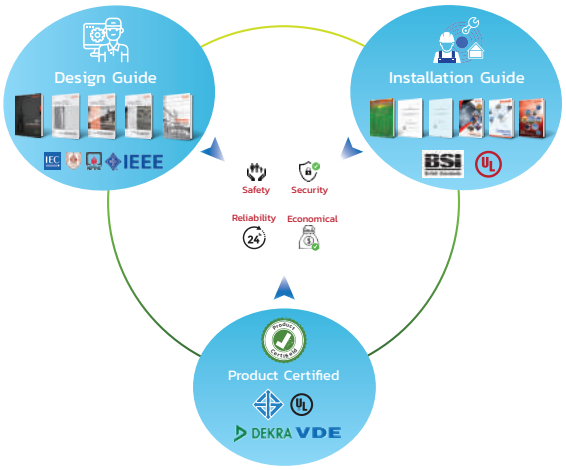



The connection between the parts of IEC 62305 Series as shown in the figure below.

Protection Against Lightning

IEC 62305 Series

IEC 62305-1
General Principles

IEC 62305-2
Risk Management

IEC 62305-3
Physical Damage to Structure and Life Hazard

IEC 62305-4
Electrical and Electronic Systems within Structure

- Air Termination System
- Down Conductor System
- Grounding System and Bonding Network
- Magnetic Shielding
- SPD
- Isolating Interface

IEC 62561 Series
Requirements for Lightning Protection System Components (LPSC)

IEC 61643 Series
Low-Voltage Surge Protective Devices





Protection Against Lightning

Lightning is one of nature's most powerful and destructive phenomena. Lightning strikes present a real and significant threat to life, to the structures in which we live and work, and to the electronic systems which support us in our daily lives.

The effects of a direct strike are obvious and immediately apparent – structures damaged, personal injuries and even loss of life. However, the secondary effects of lightning – the surge overvoltages and lightning electromagnetic impulse (LEMP) can cause damage to electrical and electronic systems within structures.

A reliable lightning protection system must encompass external lightning protection, effective grounding and surge protection of electrical and electronic system as well as the LEMP protection measures.

That's why the protection against lightning according to IEC 62305 Series is essential.

IEC 62305-1 (General Principles):
Describe the purpose of IEC 62305 Series and the connection between each part.

IEC 62305-2 (Risk Management):
Determine the need for protection, the economic benefits of installing protection measures and the selection of adequate protection measures.

IEC 62305-3
(Physical Damage to Structures and Life Hazard):
Main protection measures in and around a structure against physical damage and injury to living beings due to touch and step voltages.

IEC 62305-4
(Electrical and Electronics Systems within Structures):
Provides information on protection measures to reduce the risk of permanent failures of electrical and electronic systems within structures caused by the lightning electromagnetic impulse (LEMP).

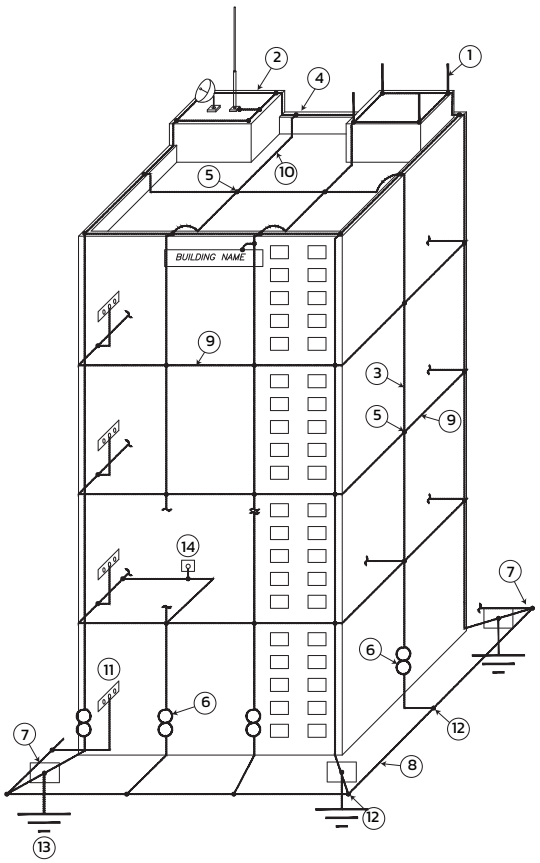

	Description
1	Air Terminals
2	Conductors
3	Down Conductors
4	Three Way Connection
5	Four Way Connection
6	Test Box
7	Concrete Inspection Pit
8	Ring Earth Electrode
9	Ring Conductor
10	Fastener
11	Bonding Bar
12	Exothermic welding
13	Ground Rod
14	Earth Point

Smart Home

Nowadays, the development and expansion of technology are moving forward fast. The house is not only for residence but also integrated with a variety of technologies to create safety and comfort for residents. These have become a necessary key for modern homes aim to become a "Smart Home" utilizing the variety of smart systems providing safety and convenience including energy consumption efficiently such as communication systems and operating systems connected to smartphones to operate various smart devices in order to control doors, gates, lighting and home appliances / security systems with alarms from CCTV systems or intrusion prevention systems / fire alarm systems / energy management from solar rooftop system as well as EV charger system, etc.

Smart Home Systems comprise various complicated connections, both electrical systems / communications / IT / solar / EV Charger; thus the most important design is to make these smart systems able to work continuously in all conditions providing stability and safety for life and properties. Thus, the proper design regarding the standard of grounding and lightning protection systems shall be considered.

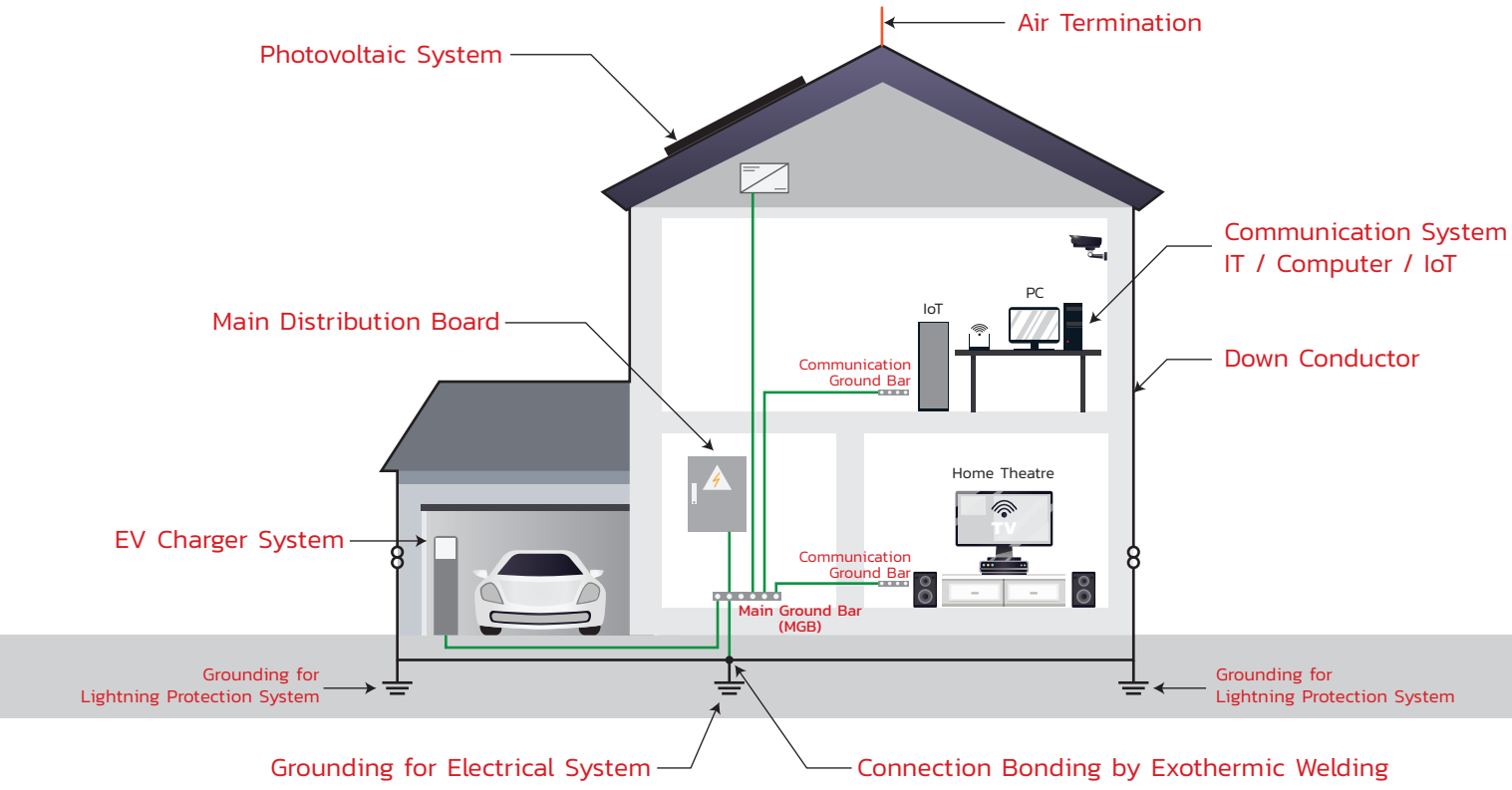

The grounding system for Smart Home shall consider the bonding of various grounding systems together by designing a ring loop around the building to limit the voltage difference between each grounding system and achieve equipotential bonding as per IEC 62305 standard.

Smart Home

Grounding and Lightning Protection System

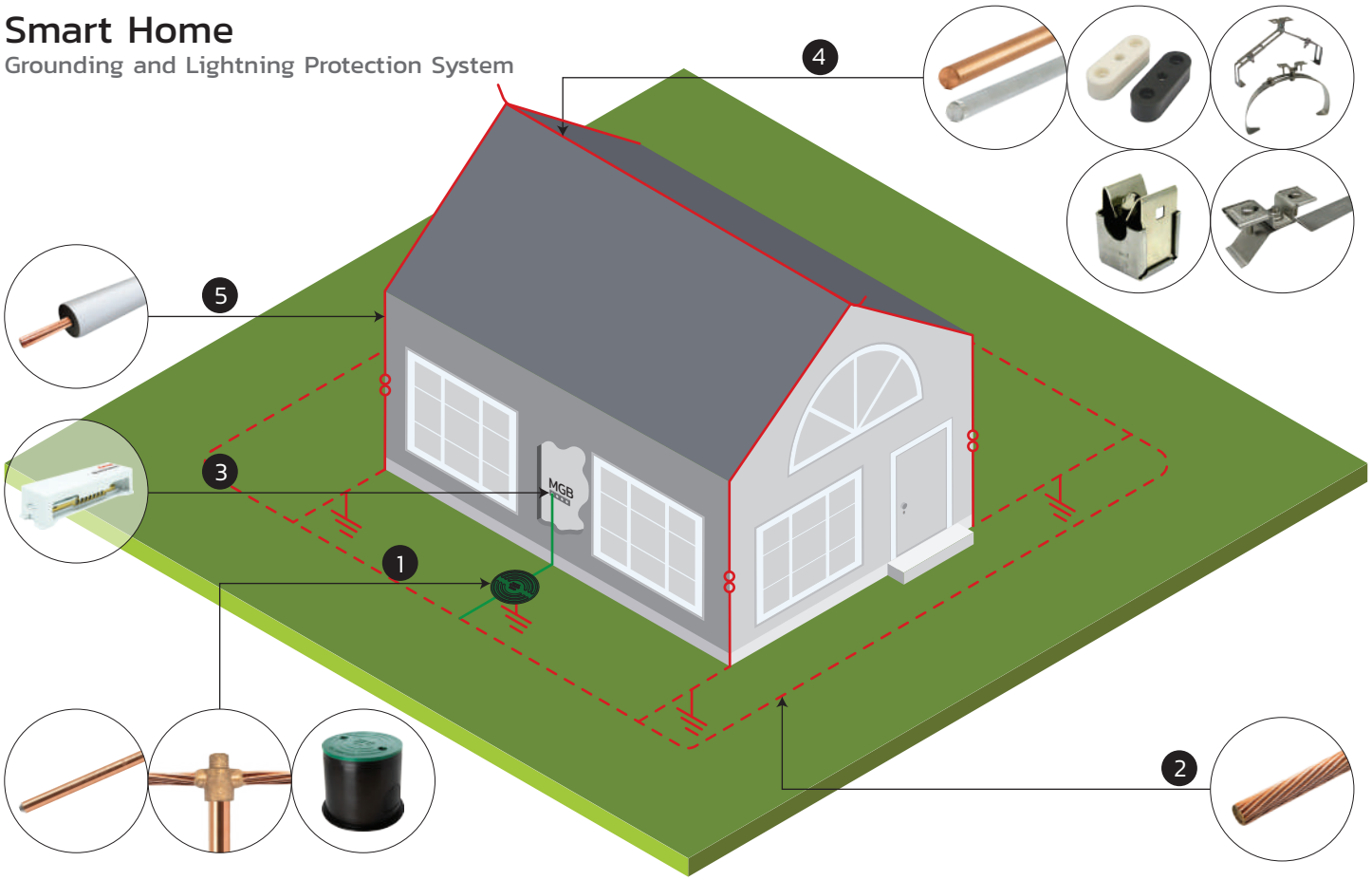

No.	Item	Page
1	Ground Rod	6
	Exothermic Welding CR25	Catalog Exothermic Welding
	ABS Inspection Pit	42
2	Annealed Copper Clad Steel Wire	83
3	Equipotential Bonding Bar	40

No.	Item	Page
4	Circular Conductors	81
	Insulator Support	67
	Roof Holders for Hip or Ridge Tiles	75
	Roof Holders for Tile Sheets	75
	Circular Conductors Holders	66
5	Kumwell Insulating Cable (KIC)	85

1. Grounding for Electrical System

- Low Ground Resistance needed for Safety
- Recommended to use exothermic welding connection between ground rod and ground conductor for permanent connection.
- Inspection Pit shall be provided for ensure the grounding effectiveness at anytime.

2. Grounding for Lightning Protection System

- Low Ground Impedance (Z) needed for effectiveness of Lightning Protection and Surge Protection.
- Ground electrode must be arranged in horizontally or spread out to achieved low Inductance (L).
- Recommended Ground Loop, Ground Grid and Counterpoise.
- Recommended to use exothermic welding connection between down conductor and ground conductor.

3. Main Ground Bar (MGB)

- Main grounding and bonding terminal for various smart home systems such as electrical systems, communication systems, IT systems, security systems, IoT devices, home entertainment, etc.

4. Air Termination System

- Recommended to use solid rounded conductor for aesthetic.

5. Down Conductor System

- Recommended to use KIC Cable for prevent dangerous from touch voltage.
- KIC Cable is insulated conductor that has passed the test for withstanding the lightning impulse voltage up to 100 kV (waveform 1.2/50 µs).Z

Smart Building

Nowadays Smart Building consist of a various electrical and electronic devices to operate smart systems within the building. The lightning protection system design is required to protect against the effects of lightning current and lightning magnetic impulse (LEMP) using 5-elements design to complete the protection such as air-termination, down conductor, grounding and bonding network, surge protection, magnetic shielding.

Kumwell recommended a modern lighting protection design and installation for smart building by using a hot-dip galvanized steel rounded conductor as the main down conductor and bonded to the rebar in concrete structure according to IEC 62305 standards for the purpose of lightning protection and serves as a good shielding of the building as well as reduce the effect of induction or interference caused by lightning electromagnetic impulse (LEMP).

Advantages of using Hot-Dip Galvanized Steel Down Conductor Embedded in Concrete?
Hot-Dip Galvanized Steel Rounded Conductor embedded in the concrete will have an equipotential bonding with the structural steel to form a large bonding network of the building.

1. The total impedance of down conductor network is very low. Thus, the danger from lighting impulse voltage is very low.

2. Provide a good shielding of buildings in accordance with IEC 62305-4 to protect internal electrical and electronic equipment from the effects of induction or interference caused by lightning electromagnetic impulses.

3. It is a basic element of good EMC practice to the building.

4. Provide lightning protection system for buildings during construction because there is down conductor installed along with the building throughout the construction.

5. Kumwell Hot-Dip Galvanized Steel Conductor has passed the test according to the IEC 62561-2. Provide better effectiveness than using structural steel directly. Generally, the typical construction steel has electrical conductivity exceed than the standard limit as defined in IEC 62561-2, which requires a specific resistivity less than 0.15 μΩm. But the typical construction steel in the market has an average specific resistivity higher than 0.2 μΩm.

6. In practical at work site, it is easier to install, control and inspect than using structural steel directly because the Hot-Dip Galvanized Steel Conductor is clearly different from rebar and there is no complicated installation process compare to rebar.

7. There is no risk of theft like copper and it is economical compared to other materials.

Smart Building

Down Conductor Design using Hot-Dip Galvanized Steel Conductor embedded in Concrete

1. The main components for using Hot-Dip Galvanized Steel Conductor embedded in concrete consists of;

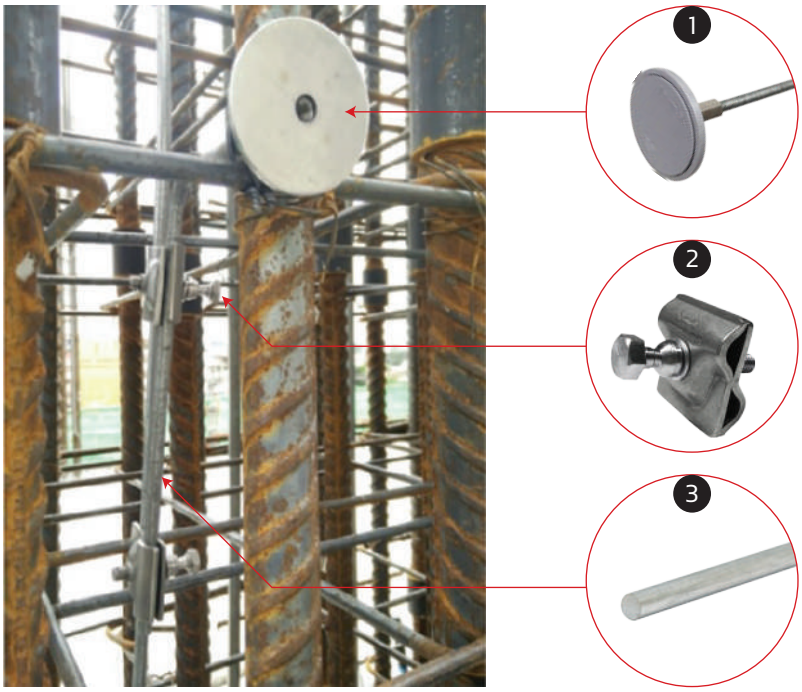

No.	Item	Page
1	Stainless Steel Earth Point	31
2	Shear Bolt Connector	63
3	Galvanized Steel Circular	80

2. The connection of the air-termination system to the down conductor system using a Hot-Dip Galvanized Steel Conductor embedded in concrete shall be connected to the Earth Point that connects from the structure to the roof floor.

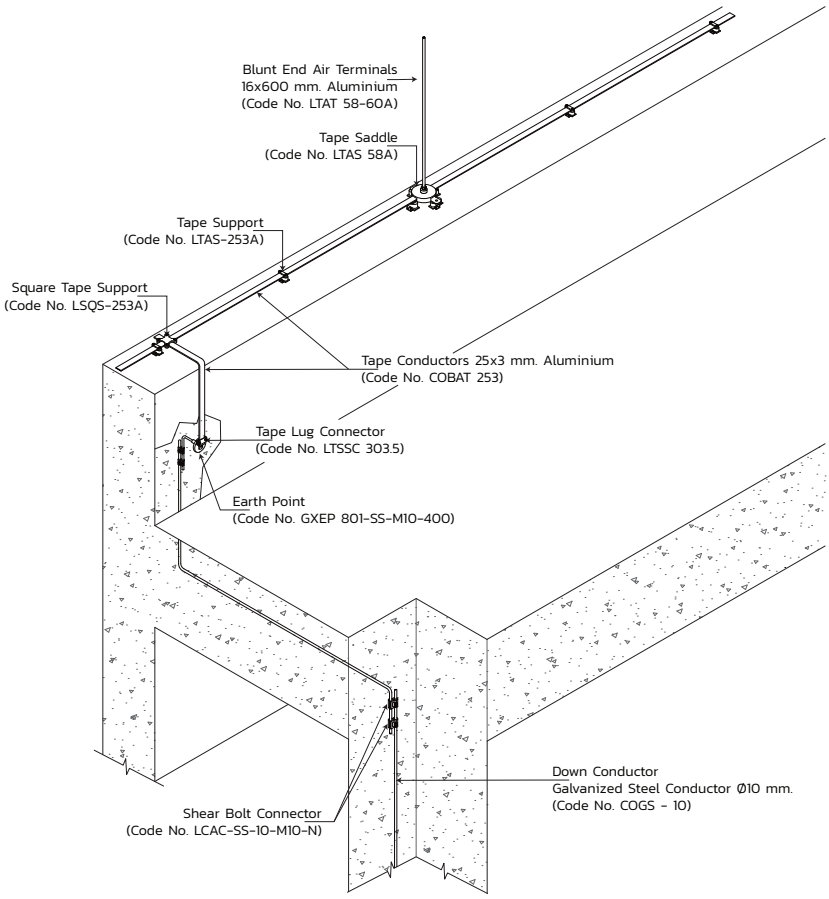

Remark: The earth point shall be installed on a vertical surface such as a column or wall. There shall not come out from the floor due to the actual installation may have various waterproofing problems for the roof.

Smart Building

3. The most important is the connection joint in concrete. In the case of connecting clamps between conductors embedded in concrete. There shall be concerned the electrical continuity and the mechanical strength especially the impact from the cement hijacking during concrete pouring due to an inspection after the concrete has set is difficult to define. Hence for every connection joint shall be use 2 clamps per joint (Double Clamp) to ensure the superior of connection regarding to IEC 62305-3.

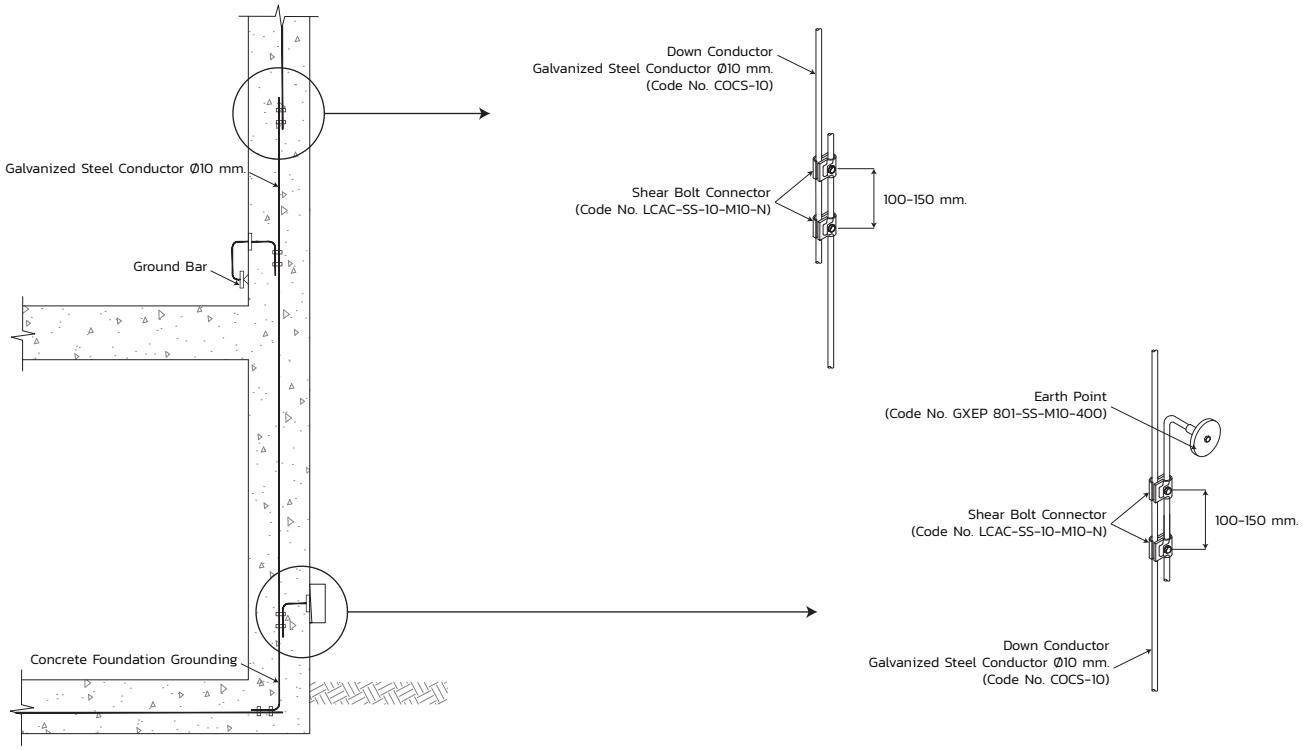

4. As the main earthing conductor is buried in concrete. Therefore, the earth point shall be installed as the grounding and bonding point by using the tail of the earth point to connect to the down conductor. And the Earth Point Header will be installed flush with the concrete formwork to be used as a connection point to the wall or concrete column. To install the Earth Point, the Earth Point Header shall be tightly coupled to the concrete formwork, when the formwork has been removed, the Earth Point Header will not sink into the concrete column or wall.

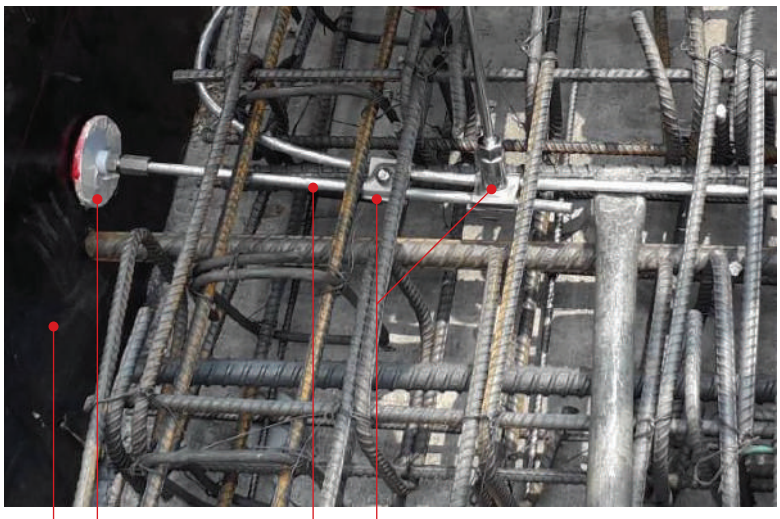

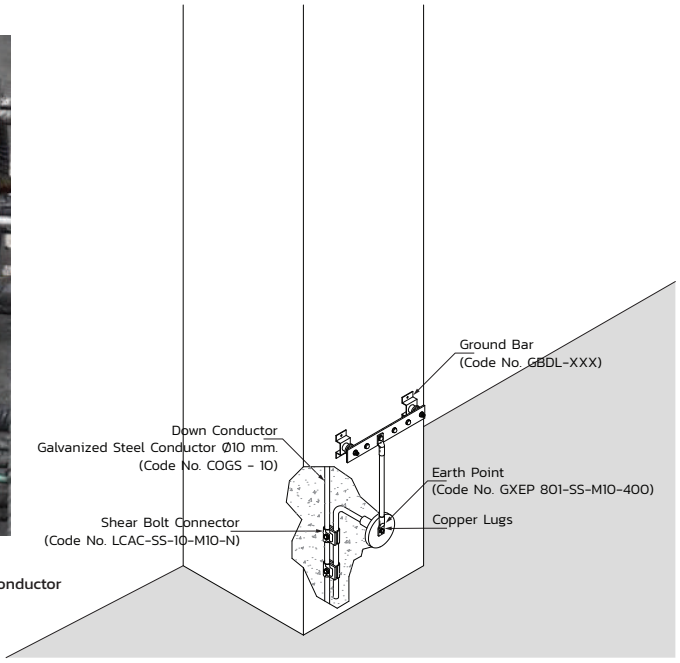

Smart Building

5. All down conductors in concrete shall be connected to the rebar with at least one clamp on every floor and tie tightly to every stirrups for strength against concrete pouring process.

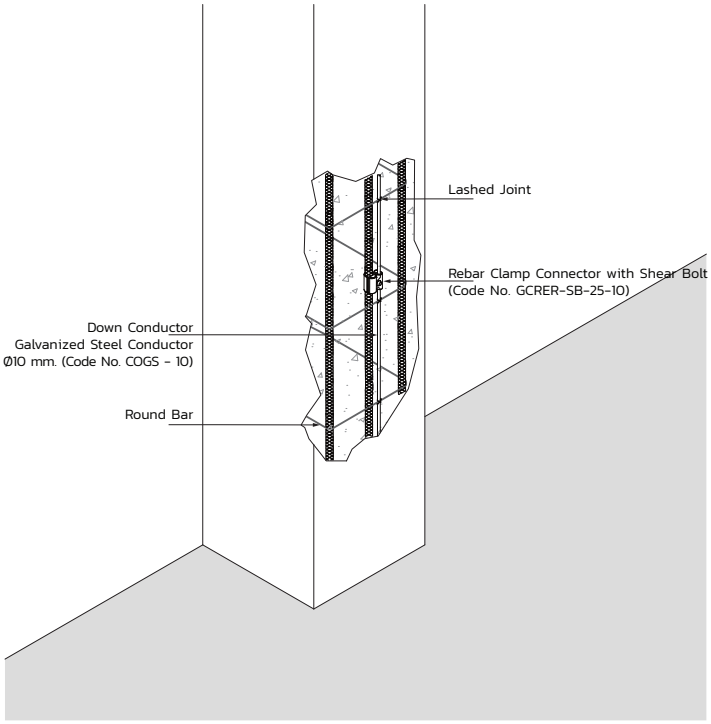

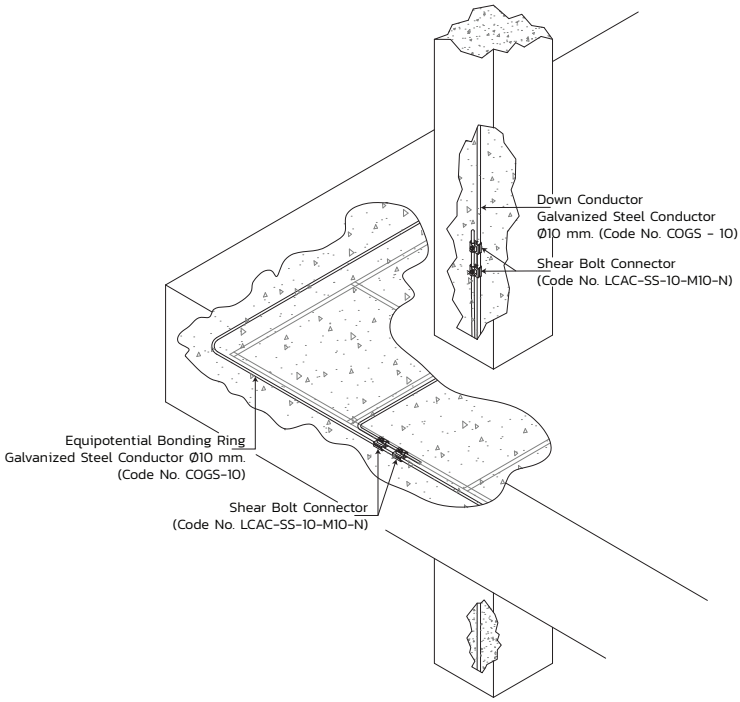

6. For the grounding system, the general design is to use concrete foundation grounding as per IEC 62305-3.

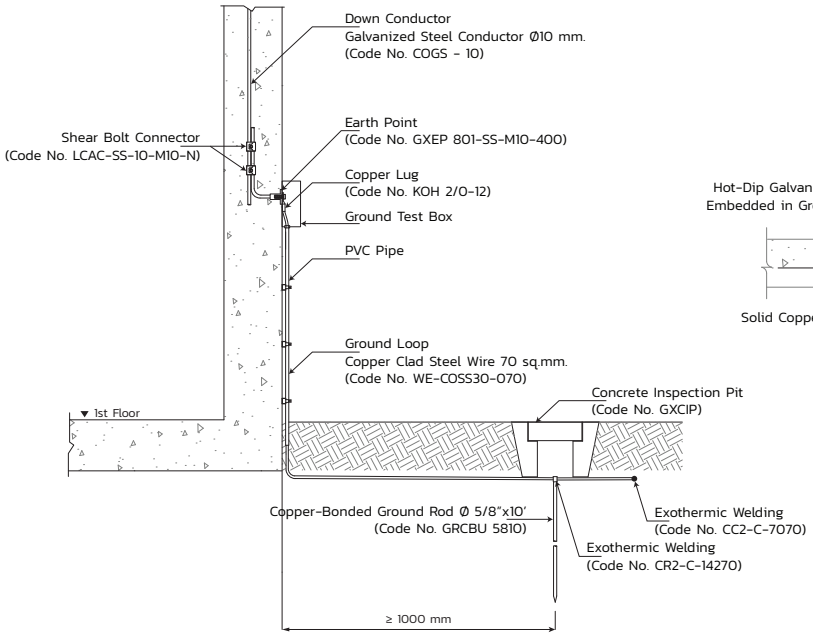

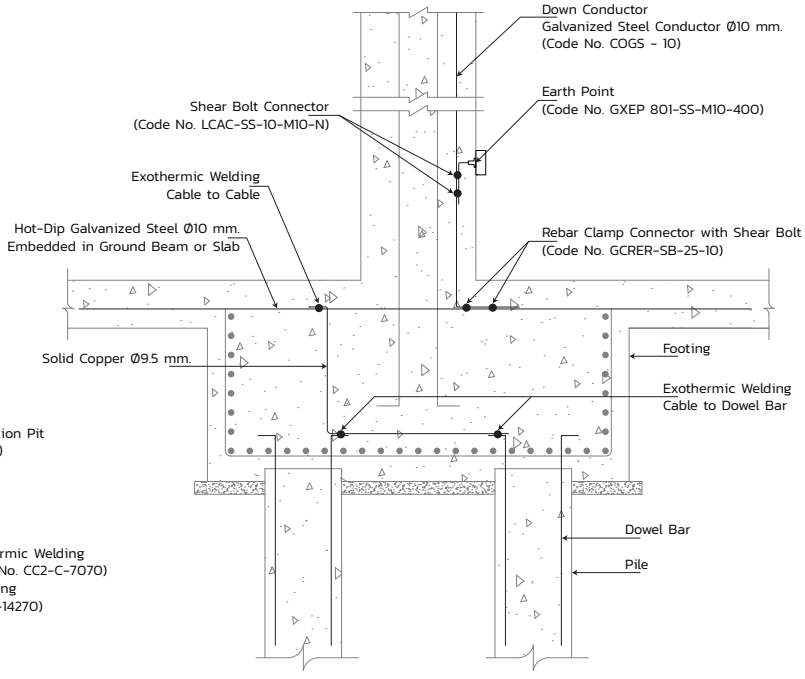

Cultural & Architectural Heritage Building

Cultural & Architectural Heritage Buildings such as temples, churches, pagodas, and other religious or cultural heritage places can be considered as public buildings where used for gathering people in general as well as to reflect the different architectural styles in each area. Therefore, it is very important and necessary to installation proper grounding and lightning protection and due to the damage from lightning strikes which can cause people and properties nearby. Thus, the design and installation of lightning protection shall be consider to assure the safety of surrounding people along with the aesthetic of architecture

1. Air-termination system

The cultural and architectural heritage buildings mostly are in a complex shape. The first thing that shall be considered is the lightning conductor type. The stranded conductor is not recommended for such installation because the stand could break apart when bending too much and the stranded cable will lose its conductivity as well as the landscape to be unattractive. Therefore, the complex shape buildings that focus on the aesthetic of installation should use the solid rounded conductor which can be bent in different directions and does not have the problem of broken strands like stranded conductor. When doing an installation, we recommend to use the conductor straightener machine to straighten the conductor. In case of where mechanical stresses such as wind loads are not critical, a solid rounded conductor diameter 9.5 mm can be used as an air-terminal.

The next point to be considered is the type of material as per IEC 62305-3, Table 6 recommendation such as copper, tinned copper, aluminium, stainless steel, etc. The selection of material, in addition to concern about the corrosion of the material for a long service life as well as the surface color to blend in with the style of architecture as well, for example in areas with high corrosion, the tinned copper materials providing long lifetime, shiny surface and avoid the occurrence of green rust stains of normal copper.



Fig.1 Use of solid rounded conductors as lightning conductors for architectural buildings

No.	Item	Page	No.	Item	Page
1	Circular Conductors	81	2	Exothermic Welding CC2	Catalog Exothermic Welding

Cultural & Architecture Heritage Building

2. Down-conductor system

The down conductor system shall be at least 2 routes, installed on opposite sides to conduct the lightning current to the ground. Shall be use solid rounded conductor to be able to bend in different directions and for the material selection shall be considered using the same criteria as the lightning conductor.

2.1 The most important to installing the down conductor for heritage and architecture buildings are to prevent the danger of touch voltage to people who are likely to access or touch the conductor within 3 meters easily, by using KIC Cables which made from solid rounded copper conductors with a cross-sectional area of 50 mm^2, insulated with a special insulation that has passed the test against lightning impulse voltage at 100 kV, 1.2/50 µs in wet conditions (simulating operating conditions during raining). KIC Cable is in accordance with the protection measures against dangerous voltage contact according to IEC 62305-3.

2.2 The conductor fastener shall be concern about safety as priority due to the installation have to clamping the down conductor to the surface or exterior wall of the building vertically, thus it is subjected to a mechanical force test to ensure that the conductor can be firmly attached to the surface without dropping and falling to the person below.

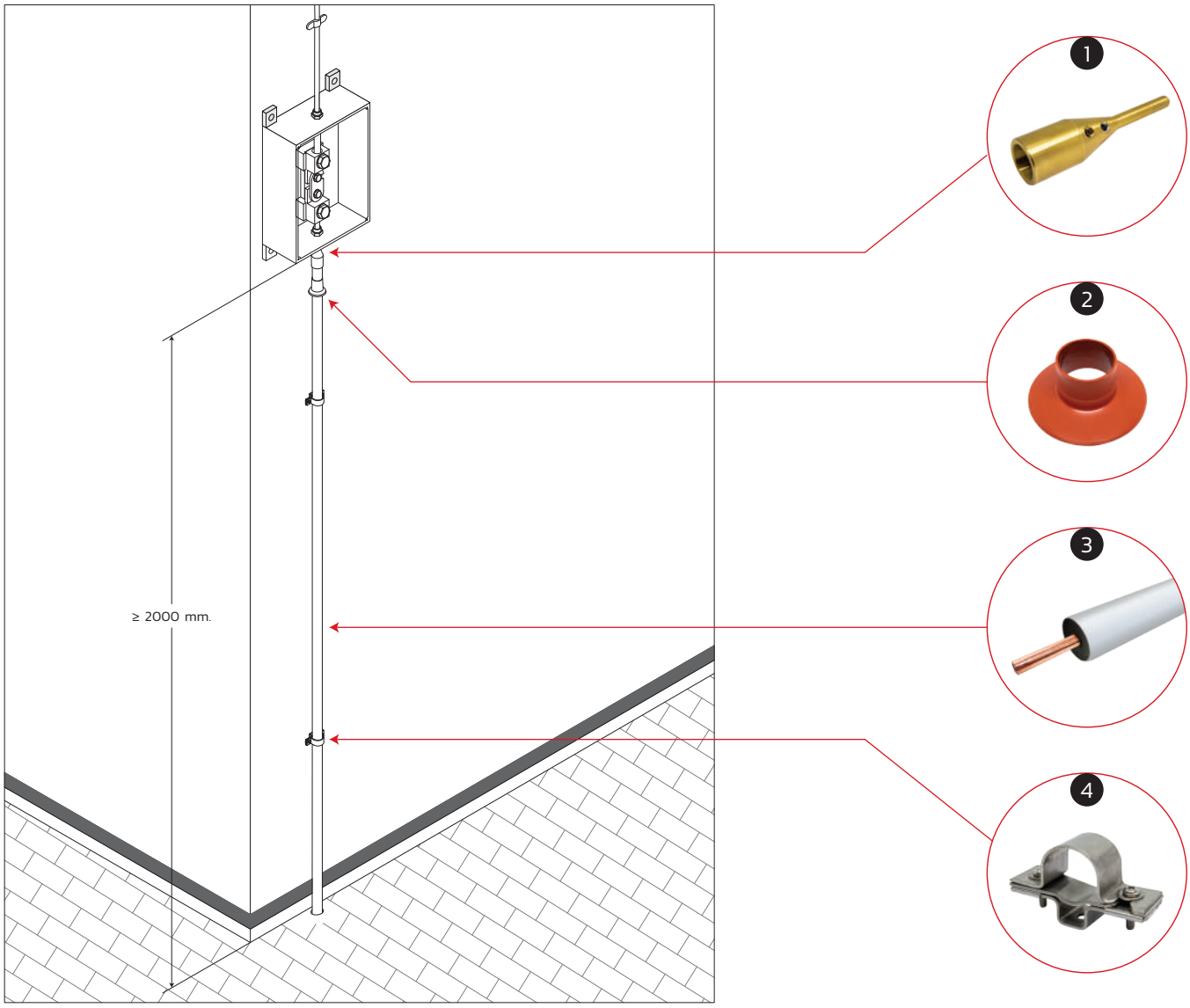

Fig 2. KIC Cable installed at a distance of approximately 2-3 meters height in an area where people can be easily touched or accessible to prevent danger from touch voltage.

No.	Item	Page	No.	Item	Page
1	Terminal for KIC	85	3	Kumwell Insulating Cable (KIC)	85
2	Shield for KIC	85	4	Cable Support for KIC	85

Cultural & Architectural Heritage Building

3. Grounding Electrode System

The grounding electrode system for the lightning protection system shall be form as a ring electrode around the structure to equalize the ground potential rise and shall be bonded each grounding system together such as power and communication systems to limit the voltage for installing the ground ring electrode, it shall be buried at a depth of at least 0.5 m and at a distance of 1 m from the surrounding outer wall.

In addition, gathering place that people attend to gather for various activities near the building such as religion important days, etc. should be additional control of the ground potential rise around buildings to prevent danger from step voltage by installing additional ground ring electrodes at a distance of 3 m, 6 m, 9 m from the first ring and connected between the rings by radial guides but if the area next to the building is covered by a minimum 50 mm layer of asphalt, this is generally considered to be adequate protection.

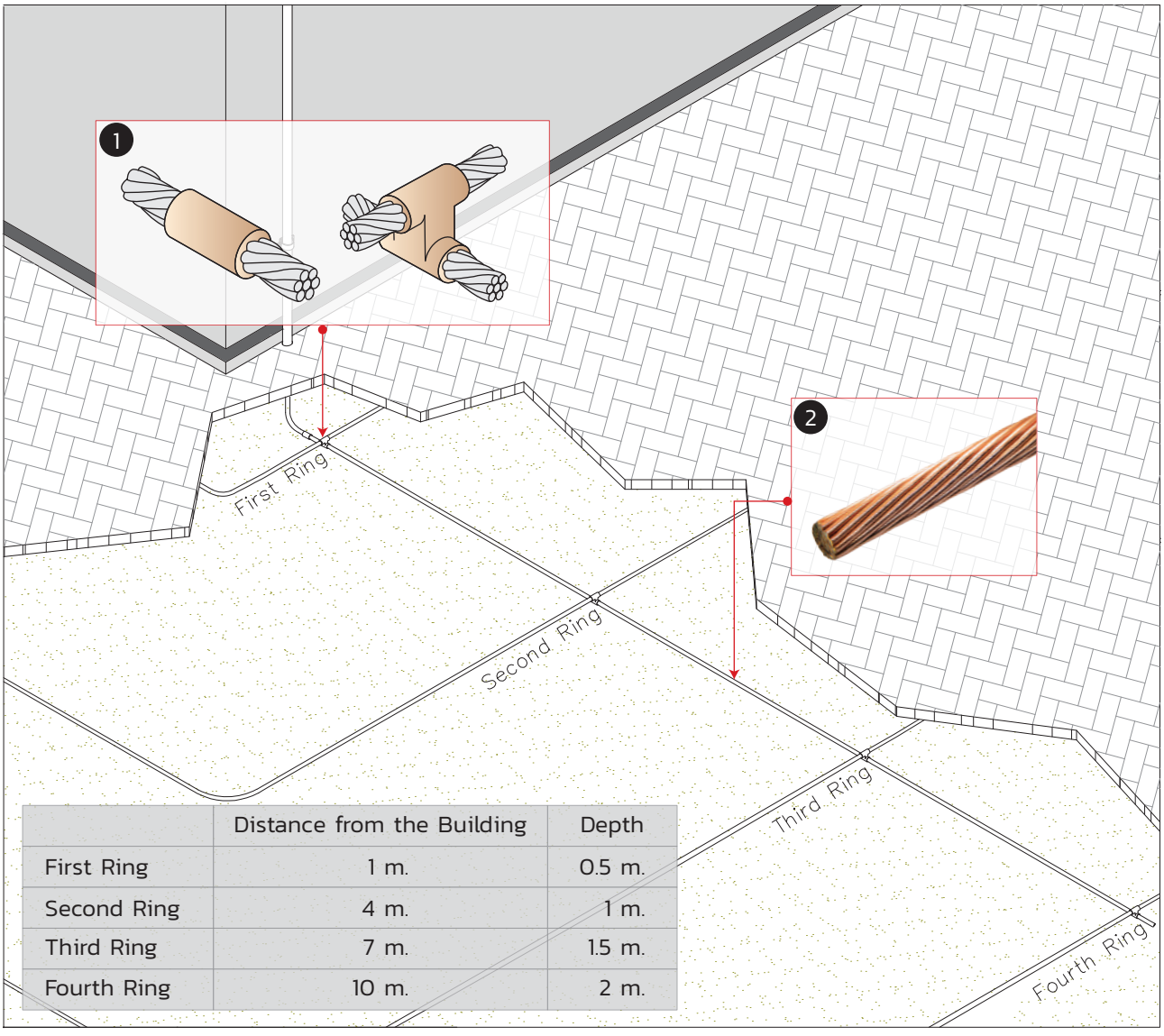

	Distance from the Building	Depth
First Ring	1 m.	0.5 m.
Second Ring	4 m.	1 m.
Third Ring	7 m.	1.5 m.
Fourth Ring	10 m.	2 m.

Fig.3 Installation of ground ring electrodes for protection against step voltage hazards.

No.	Item	Page	No.	Item	Page
1	Exothermic Welding	Catalog Exothermic Welding	2	Annealed Copper Clad Steel Wire	83

Content

1-5		**Introduction to Ground Rod**
6		Copper - bonded Ground Rod - TIS series
7-9		Copper - bonded Ground Rod - Standard series
10-12		Copper - bonded Ground Rod - Thread series
13		Coupling
13		Driving Head
13		Tip
14		Ground Rod Solid Copper / Stainless Steel
15		Coupling for Solid Copper / Stainless Steel Ground Rod
15		Driving Head for Solid Copper / Stainless Steel Ground Rod
15		Spike
16		Ground Rod Driving Hammer
16		Ground Rod Electric Driving Hammer
17		Electrolytic Grounding - KEG
18		Ground Plate - Lattice Copper
18		Ground Plate - Solid Copper
18		Ground Plate - Copper - Bonded Steel
19		Signal Reference Ground Grid
20-21		**Introduction to More Effective Grounding - MEG**
22		More Effective Grounding - MEG
23	NEW	**Vertical MEG Electrode**
23	NEW	**Horizontal MEG Electrode**
24		Rod to Tape Clamp
24		Rod to Cable Clamp
24		Rod to Cable Lugs Clamp
25		Rod to Cable Clamp
26		Rod or Pipe to Two Cable Clamp
26		Rod or Pipe to Three Cable Clamp
27		U Bolt Rod Clamp
27		Pipe to Cable Clamp
28		Clamp A Cable to Flat Bar
28		Clamp Two Cable to Flat Bar

Content

29		One Cable to Pipe Clamp
29		Pipe Bond Clamp
29		Tape Clamp
30		Cable Grid
30		Ground Clamp
30		Static Earth Receptacle
31		Earth Point
32		Earth Boss
32		Connector Screw Type
32		Eye Bolt
33		Flexible Copper Braid Bond
33		Expansion Braid Bond
34		Grounding Test Box
35		Cable-Tape Test Connector
35		Cable Test Connector
35		Tape Test Connector
36		**Introduction to Ground Bar**
37	NEW	**Ground Bar (Twin Disconnecting Link)**
37	NEW	**Ground Bar (Single Disconnecting Link)**
38	NEW	**Ground Bar (Without Disconnecting Link)**
38		Ground Bar (Disconnecting Link)
39		Ground Bar (Main Ground Station)
39		Ground Bar (Telecommunication / Communication Ground Station)
40		Ground Bar (For Bonding and Equipotential)
40	NEW	**Equipotential Bonding Bar**
41		**Introduction to Inspection Pit**
42	NEW	**ABS Inspection Pit**
43-44		Concrete Inspection Pit
45		Copper Earthing Electrode Water Sealing Glands
45		Ground Bar Pit
46		Heavy high-Grade Polypropylene Inspection Pit

Content

46	Ground Rod Seal
47	Static Earth Reels
48	Static Earth Reels with Monitor and Remote Interlock Controlled
49	Blunt End Air Terminal
50	Blunt End Air Terminal (Height ≥1.5 m.)
51	Multi Point Air Terminals
52	Air Terminals Tip
52	Elevation Air Terminals for Air Terminal Tip
53	Strike Pad
53	Air Terminal Bracket
53	Puddle Flange
54	NEW **Universal Saddle**
54	Round Saddle
54	Tape Saddle
55	Flat Saddle
55	Double Base Saddle
56	Cross Cable Saddle
56	Adjustable Saddle
57	Floor Saddle
57	Wall Saddle
58	Cable Support
58	Cable Cross Clamp
58	Tee Clamp
59	Cable to Tape
59	One Hole Cable Grip
59	Tape Clip
60	Tape Support
60	Square Tape Support
61	Bi-Metallic Connector
61	Back Plate Holdfast
62	Back Holdfast

Content

62	Conductor to Rebar Clamp
62	Terminal Lug
62	Split Bolt
63	Universal Connector
63	Shear Bolt Connector
63	Rebar Clamp Connector with Shear Bolt
64	Q-Connector
64	Z-Connector
64	Tape Support (LPS)
65	Tape Lug Connector
65	Square Tape Clamp
65	Round and Tape Connector
66	Circular Conductors Holders
66	Tape Clip with Adhesive Base
66	Pyramid Holdfast
67	Non Metallic DC Clips
67	Adhesive Base
67	Insulator Support
68	Accessories
69	Adhesive
69	Solvent Cleaning
70	**Introduction to Lightning Pole**
71	Lightning Pole
72	Self - Standing Lightning Pole (Hot Dip Galvanized)
73	**Introduction to Metal Sheet Clamp**
74	Metal Sheet Clamp
75	Roof Holders
75	Anti-Vandal Down Conductor Guard
76	**Introduction to Conductor**
77-79	Tape Conductors
80-81	Circular Conductors

Content

82	Conductor Bender
82	Conductor Straightener
82	Conductor Straightener with electric drive
83	Annealed Copper-Clad Steel Wire
83	Stranded Copper Conductor
84	**Introduction to Kumwell Insulating Cable (KIC)**
85	Insulating Cable (KIC)
85	Terminal for KIC
85	Shield for KIC
85	Cable Support for KIC
86	**Introduction to High Voltage Insulating Down Conductor Cable (KHV)**
87	High Voltage Insulating Down Conductor Cable (KHV)
87	Terminal for KHV
87	Cable Support for KHV
88	Copper Lug for Exothermic Welding
89	Copper Lugs 1-Hole
90-91	Copper Lugs 2-Hole
92	Copper Lugs One-Hole Long Barrel 90° Pad
93	Copper Lugs Two-Hole Long Barrel 90° Pad
94	Copper Lugs 4-Hole
95	Copper Lugs
96-97	Copper C-Clamp
98	Hydraulic Crimping Tool
99-105	**Introduction to Innovation**
106-111	Domestic Project Reference
112-116	International Project Reference
118-122	Index

Standard Ground Rod

Copper-Bonded Ground Rods meet the requirements of the world rigorous standard-UL. Ground rods are made by molecularly bonding process 99.9% purity electrolytic copper onto high tensile and low carbon steel cores to ensure a perfect and even bonding between the steel and copper. The copper layer whose minimum thickness is 254 micron met to IEC 62561-2 and UL standard.

Standard size diameters being common used are 1/2", 5/8", 3/4", and 1".

Standard lengths being common used are 4' to 10'.

Thread type ground rods are available for extensible the length of ground rods by coupling.

Intensive Test and Inspection of Ground Rod

Ground Rods should pass the following criterions of international standards as shown;

Thickness Inspection

Copper shell of each ground rod shall be passed the thickness inspection to ensure its protective coating. The copper shell shall not be less than 0.254 mm (254 micron) thick at any point met to UL 467 standard.





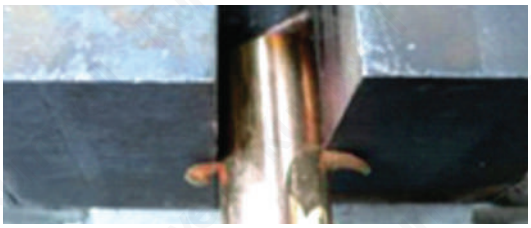

Adherence of Coating Test

There shall be no separation of the coating from the steel core when subjected to the test described as follow met with UL 467standard requirements. Peeling of the coating by the steel plates or the jaws of the vise shall be allowed.



Bending Strength Test

There shall be no cracking of the coating when subjected to the test met with UL 467 standard requirements. The application of force shall be such that the rod is permanently bent through a 30o angle.



Straightness Test

Ground rod should be passed straightness test to ensure in its straightness and high tensile with acceptable sag. The deviation of every 305 mm ground rod shall be less than 3.05 mm.

Ground Rod

There are several main objectives providing for well-designed grounding system. First priority is personal safety which followed by protection equipment, signal reference quality, return path for faults and surges, and static dissipation.

In order to follow these objectives, all components shall be meet up to international standards as IEC 62561-2, UL 467. Grounding system must be maintained in a low permanent resistance under adverse conditions for the expected lifetime of Grounding System.

Ground Rods, Conductors, and Connectors in Grounding Network are subjected to severe corrosion to acidic and high concession of salt environment. In case of high mechanical stress is due to the electromagnetic force, and also rapid thermal heating is due to the high current magnitude during fault conditions.

Ground Rod Selection

When choosing which material types to use for a ground rod, the best way is to consider the installation location by measuring soil pH whether if it is acidic, neutral or alkaline.

- If it is acidic (pH < 6), the recommended selection is stainless steel ground rod.
- If it is neutral (pH between 6 - 8), the recommended selection is copper bonded ground rod (254 micron).
- If it is alkaline (pH > 8), the recommended selection is solid copper ground rod. In case of hard soil condition, the recommended selection is copper bonded ground rod 375 or 508 micron.

Copper-Bonded Ground

- Ground rods are made from high tensile low carbon steel.
- Each rod is made by molecularly bonding 99.9 % pure electrolytic copper.
- Molecular bond to nickel-sealed high strength steel core
- The copper layer whose minimum thickness 254 micron met to UL standard
- High tensile steel core 450 N/mm2 and ensurer a long life span.

Solid Copper

- High investment and high resistance to corrosion
- Low resistivity
- Solid Copper Ground Rod must be prepared a hole which deep down equal with length rod for protect bending (can't be hammering rod).

Stainless Steel (316L)

- High investment and high resistance to corrosion
- High Strength

Ground Rod

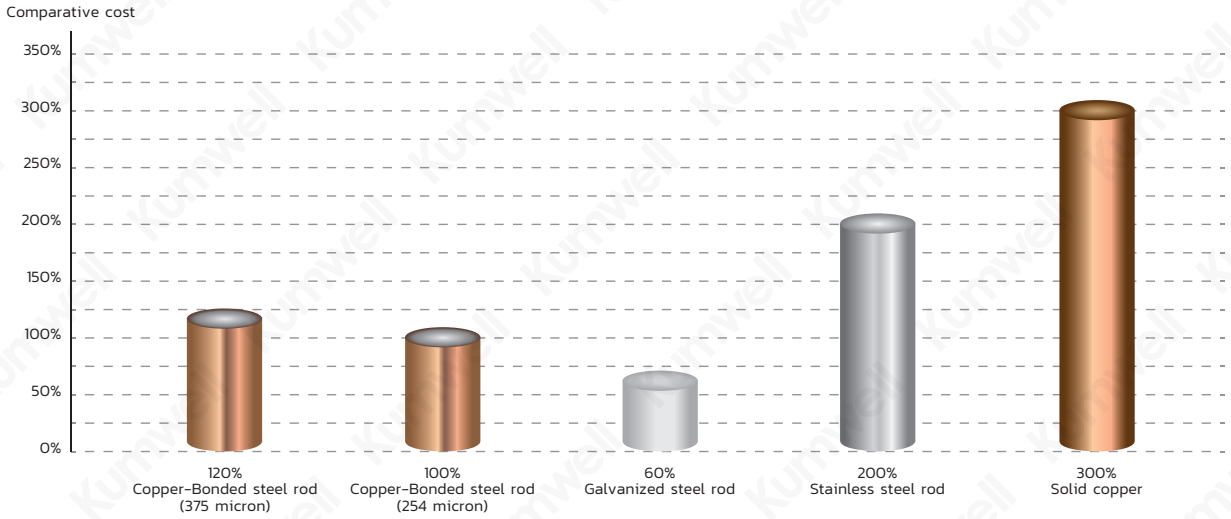

Comparative initial cost (Copper bond steel rod 254 micron as 100% base)

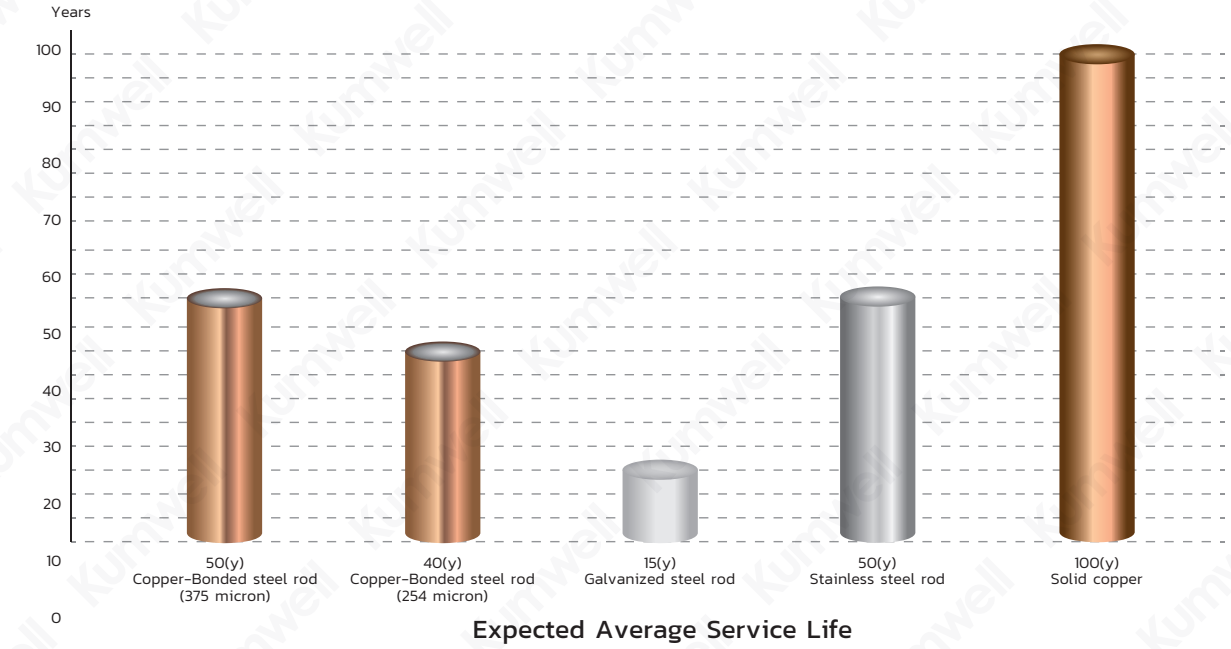

Expected Average Service Life

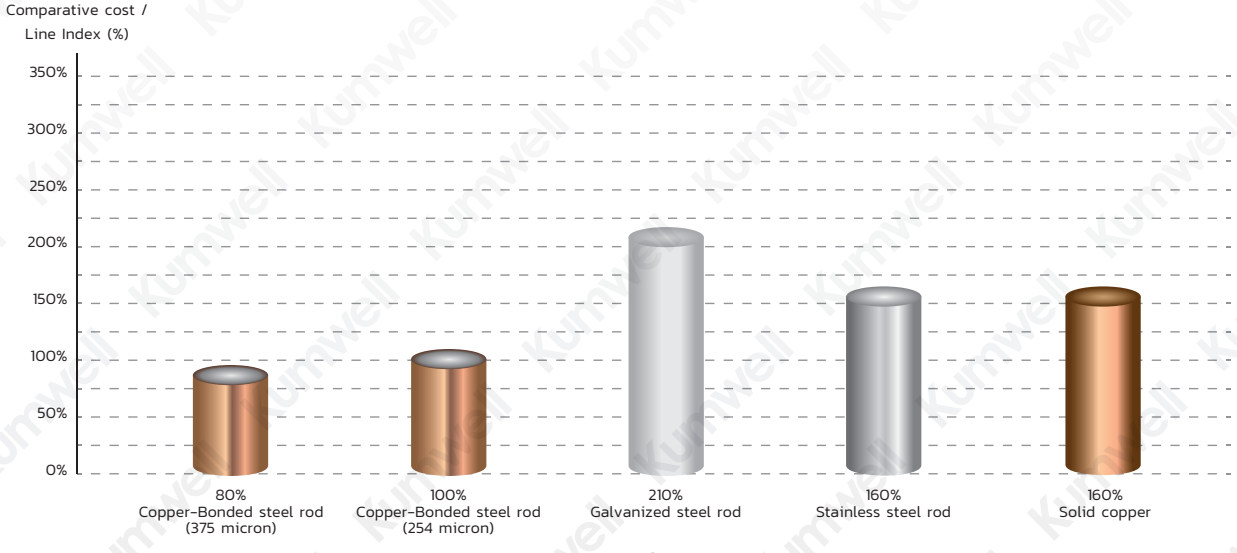

Comparative Annual cost (Lower is Better)

Ground Rod Selection

There are two main factors for choosing Ground Rod.

- Material
- Size

Material Selection

BS 7430 standard contains the following corrosion protection recommendations:

- Stainless Steel has the best resistant to corrosion with normal resistivity but has a relatively high price
- Solid Copper Rod is very resistant to corrosion with very low resistivity but has a very high price.
- Copper Bonded Rod (254 micron) is resistant to corrosion with a low resistivity, and is very strong. Because the core is steel, but cheap

Corrosion resistance and Price

		Soild Copper	Copper Bonded	Galvanized Steel	Stainless Steel	
Soil-pH	Acidic (pH < 6)	●●●	●●●	●●●●	●●	Corrosion Rate
	Neutral (pH 6 to 8)	●	●	●	●	
	Alkaline (pH > 8)	●●	●●	●●●	●	
Price		Very High	Normal	Low	High	
Age		100 Year	40-60 Year*	15 Year	50 Year	

Note : BS 7430 : 2011,Table 9, Page 59

*Copper Bonded 254 micron = 40 year, 375 micron = 50 year, 508 micron = 60 year

The corrosion characteristics of each material compared to the soil (●)

● = indicate corrosion resistance generally unaffected

●● = indicate corrosion resistance only slightly reduced

●●● = indicate corrosion resistance moderately reduced

●●●● = indicate corrosion resistance considerably reduced

Sizing

The selection of material, configuration and cross-sectional area of ground rods shall be in accordance to IEC 62561-2 (Requirements for Conductors and Earth Electroded)

Material, configuration and cross-sectional area of earth electrodes

Material	Configuration	Cross-sectional area[a]			Recommended dimensions
		Earth rod mm²	Earth conductor mm²	Earth plate cm2	
Copper, Tin plated copper [f]	Stranded		≥ 50 [i]		1, 7 mm strand diameter
	Solid round		≥ 50		8 mm diameter
	Solid tape		≥ 50		2 mm thick
	Solid round	≥ 176			15 mm diameter
	Pipe	≥ 110			20 mm diameter with 2 mm wall thickness
	Solid plate			≥ 2 500	500 mm x 500 mm and 1, 5 mm thick [g]
	Lattice plate [g]			≥ 3 600	600 mm x 600 mm consisted of 25 mm x 2 mm section for tape or 8 mm diameter for round conductor
Copper-Bonded steel	Solid round	≥ 150 h			14 mm diameter if 250 µm minimum radial copper coating with 99.9% copper content
	Solid round		≥ 50		8 mm diameter if 250 µm minimum radial copper coating of 99.9% copper content
	Solid round [l]		≥ 78		10 mm diameter if 250 µm minimum radial copper coating of 99.9% copper content
	Solid tape [l]		≥ 90		3 mm thick if 250 µm minimum copper coating of 99.9% copper content
Stainless steel [j]	Solid round		≥ 78		10 mm diameter
	Solid round	≥ 176 h			15 mm diameter
	Solid tape		≥ 100		2 mm thick
Note: For the application of the earth electrodes, see IEC 62305-3.					

a Manufacturing tolerance : -3%.

b Threads, where utilized, shall be machined prior to galvanizing.

c The copper shall be intrinsically bonded to the steel. The coating can be measured using an electronic coating measuring thickness instrument.

d Lattice plate constructed with a minimum total conductor length of 4, 8 m.

e Different profiles are permitted with a cross section of 290 mm² and a minimum thickness of 3 mm, e.g. cross profile.

f Hot dipped or electroplated; minimum thickness coating of 1 µm. There is no requirement to measure the tin plated copper because it is for aesthetic reasons only.

g In some countries, the cross-sectional area may be reduced to ≥ 1 800 cm² and the thickness to ≥ 0, 8 mm.

h In some countries, the cross-sectional area may be reduced to 125 mm².

i The cross-sectional area of stranded conductors is determined by the resistance of the conductor according to IEC 60228.

j Chomium ≥ 16%, nickel ≥ 5%, molybdenum ≥ 2%, carbon ≤ 0.08%.

k Shall be embedded in concrete for a minimum depth of 50 mm.

l Due to higher corrosion rate for solid tape earth conductors, it is recommended to use copper-coated steel with a coating of 250 µm.

Copper-Bonded Ground Rod (TIS Series)



TIS 3024
Part 2-2563

Copper-Bonded Ground Rod is made by molecularly bonding pure electrolytic copper onto a low carbon, high tensile steel core with exceeding 0.25 mm (250 micron) thick. The material made of 99.9% pure electrolytic copper with high tensile steel. To ensure in safety and quality, it meets IEC and TIS standard for grounding and bonding equipments.



Standard Type

Code No.	Nominal Diameter (Ø) (in)	Actual Diameter (Ø) (mm)	Length (m)	Weight (kg)
GRCB 124 TIS	1/2	12.7	1.2	1.23
GRCB 126 TIS	1/2	12.7	1.8	1.85
GRCB 128 TIS	1/2	12.7	2.4	2.47
GRCB 1210 TIS	1/2	12.7	3.0	3.08
GRCB 584 TIS	5/8	14.2	1.2	1.54
GRCB 586 TIS	5/8	14.2	1.8	2.31
GRCB 588 TIS	5/8	14.2	2.4	3.08
GRCB 5810 TIS	5/8	14.2	3.0	3.80
GRCB 344 TIS	3/4	17.2	1.2	2.23
GRCB 346 TIS	3/4	17.2	1.8	3.35
GRCB 348 TIS	3/4	17.2	2.4	4.46
GRCB 3410 TIS	3/4	17.2	3.0	5.58

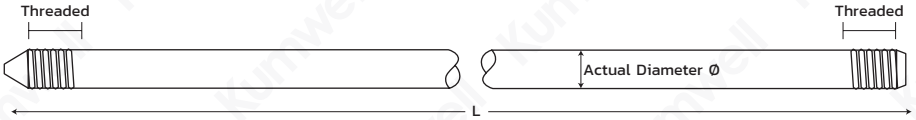

Threaded Type

Code No.	Nominal Diameter (Ø) (in)	Actual Diameter (Ø) (mm)	Threaded Size (in)	Length (m)	Weight (kg)
GRCBT 124 TIS	1/2	12.7	1/2	1.2	1.23
GRCBT 126 TIS	1/2	12.7	1/2	1.8	1.85
GRCBT 128 TIS	1/2	12.7	1/2	2.4	2.47
GRCBT 1210 TIS	1/2	12.7	1/2	3.0	3.08
GRCBT 584 TIS	5/8	14.2	5/8	1.2	1.54
GRCBT 586 TIS	5/8	14.2	5/8	1.8	2.31
GRCBT 588 TIS	5/8	14.2	5/8	2.4	3.08
GRCBT 5810 TIS	5/8	14.2	5/8	3.0	3.80
GRCBT 344 TIS	3/4	17.2	3/4	1.2	2.23
GRCBT 346 TIS	3/4	17.2	3/4	1.8	3.35
GRCBT 348 TIS	3/4	17.2	3/4	2.4	4.46
GRCBT 3410 TIS	3/4	17.2	3/4	3.0	5.58

Material
High tensile strength steel
Copper purity > 99.9%

Tested Standard
IEC 62561 Part 2
TIS 3024 Part 2

Application
Suitable for disperse current into the earth.

Certified Mark
TIS

Note : Special Size, Diameter, Length Copper thickness can be requested.

Copper-Bonded Ground Rod (254 micron)

Copper-Bonded Ground Rod is made by molecularly bonding pure electrolytic copper onto a low carbon, high tensile steel core with exceeding 0.254 mm (254 micron) thick. The material made of 99.9% pure electrolytic copper with high tensile steel. To ensure in safety and quality, it meets UL and IEC standard for grounding and bonding equipments.



LISTED
GROUNDING ELECTRODE
32UG



Standard Type (UL-Listed)

Code No.	Nominal Diameter (Ø) (in)	Actual Diameter (Ø) (mm)	Length (ft)	Weight (kg)
GRCBU 128	1/2	12.7	8	2.47
GRCBU 1210	1/2	12.7	10	3.08
GRCBU 588	5/8	14.2	8	3.08
GRCBU 5810	5/8	14.2	10	3.80
GRCBU 348	3/4	17.2	8	4.46
GRCBU 3410	3/4	17.2	10	5.58
GRCBU 18	1	23.1	8	8.04
GRCBU 110	1	23.1	10	10.15

Standard Type

Code No.	Nominal Diameter (Ø) (in)	Actual Diameter (Ø) (mm)	Length (ft)	Weight (kg)
GRCBU 124	1/2	12.7	4	1.23
GRCBU 126	1/2	12.7	6	1.85
GRCBU 584	5/8	14.2	4	1.54
GRCBU 586	5/8	14.2	6	2.31
GRCBU 344	3/4	17.2	4	2.23
GRCBU 346	3/4	17.2	6	3.35
GRCBU 14	1	23.1	4	4.30
GRCBU 16	1	23.1	6	6.09

Material
High tensile strength steel
Copper purity > 99.9%

Tested Standard
IEC 62561 Part 2
UL 467

Application
Suitable for disperse current into the earth.

Certified Mark
UL

Note : Special Size, Diameter, Length Copper thickness can be requested.

Copper-Bonded Ground Rod (375 micron)



Copper-Bonded Ground Rod is made by molecularly bonding pure electrolytic copper onto a low carbon, high tensile steel core with exceeding 0.375 mm (375 micron) thick. The material made of 99.9% pure electrolytic copper with high tensile steel. To ensure in safety and quality, it meets UL and IEC standard for grounding and bonding equipments.

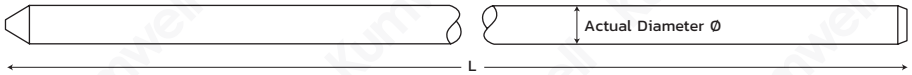

Standard Type

Code No.	Nominal Diameter (Ø) (in)	Actual Diameter (Ø) (mm)	Length (ft)	Weight (kg)
GRCB375 124	1/2	12.9	4	1.12
GRCB375 126	1/2	12.9	6	1.68
GRCB375 128	1/2	12.9	8	2.59
GRCB375 1210	1/2	12.9	10	3.24
GRCB375 584	5/8	14.3	4	1.60
GRCB375 586	5/8	14.3	6	2.24
GRCB375 588	5/8	14.3	8	3.17
GRCB375 5810	5/8	14.3	10	3.97
GRCB375 344	3/4	17.3	4	2.33
GRCB375 346	3/4	17.3	6	3.49
GRCB375 348	3/4	17.3	8	4.72
GRCB375 3410	3/4	17.3	10	5.80
GRCB375 14	1	23.3	4	4.19
GRCB375 16	1	23.3	6	6.29
GRCB375 18	1	23.3	8	8.35
GRCB375 110	1	23.3	10	10.47

Material
High tensile strength steel
Copper purity > 99.9%

Tested Standard
IEC 62561 Part 2
UL 467

Application
Suitable for disperse current into the earth.

Note : Special Size, Diameter, Length Copper thickness can be requested.

Copper-Bonded Ground Rod (508 micron)



Copper-Bonded Ground Rod is made by molecularly bonding pure electrolytic copper onto a low carbon, high tensile steel core with exceeding 0.508 mm (508 micron) thick. The material made of 99.9% pure electrolytic copper with high tensile steel. To ensure in safety and quality, it meets UL and IEC standard for grounding and bonding equipments.



Standard Type

Code No.	Nominal Diameter (Ø) (in)	Actual Diameter (Ø) (mm)	Length (ft)	Weight (kg)
GRCB508 124	1/2	13.2	4	1.13
GRCB508 126	1/2	13.2	6	1.78
GRCB508 128	1/2	13.2	8	2.71
GRCB508 1210	1/2	13.2	10	3.39
GRCB508 584	5/8	14.6	4	1.65
GRCB508 586	5/8	14.6	6	2.48
GRCB508 588	5/8	14.6	8	3.30
GRCB508 5810	5/8	14.6	10	4.14
GRCB508 344	3/4	17.6	4	2.38
GRCB508 346	3/4	17.6	6	3.57
GRCB508 348	3/4	17.6	8	4.79
GRCB508 3410	3/4	17.6	10	6.00
GRCB508 14	1	23.6	4	4.26
GRCB508 16	1	23.6	6	6.40
GRCB508 18	1	23.6	8	8.57
GRCB508 110	1	23.6	10	10.74

Material
High tensile strength steel
Copper purity > 99.9%

Tested Standard
IEC 62561 Part 2
UL 467

Application
Suitable for disperse current into the earth.

Note : Special Size, Diameter, Length Copper thickness can be requested.

Copper-Bonded Ground Rod (254 micron)



UL LISTED
GROUNDING ELECTRODE
32UG

Copper-Bonded Ground Rod is made by molecularly bonding pure electrolytic copper onto a low carbon, high tensile steel core with exceeding 0.254 mm (254 micron) thick. The material made of 99.9% pure electrolytic copper with high tensile steel. To ensure in safety and quality, it meets UL and IEC standard for grounding and bonding equipments.

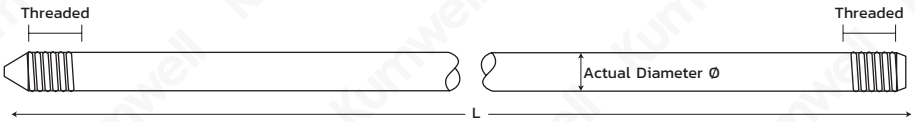

Threaded Type (UL-Listed)

Code No.	Nominal Diameter (Ø) (in)	Actual Diameter (Ø) (mm)	Threaded Size (in)	Length (ft)	Weight (kg)
GRCBUT 128	1/2	12.7	1/2	8	2.47
GRCBUT 1210	1/2	12.7	1/2	10	3.08
GRCBUT 588	5/8	14.2	5/8	8	3.08
GRCBUT 5810	5/8	14.2	5/8	10	3.80
GRCBUT 348	3/4	17.2	3/4	8	4.46
GRCBUT 3410	3/4	17.2	3/4	10	5.58
GRCBUT 18	1	23.1	1	8	8.25
GRCBUT 110	1	23.1	1	10	10.15

Threaded Type

Code No.	Nominal Diameter (Ø) (in)	Actual Diameter (Ø) (mm)	Threaded Size (in)	Length (ft)	Weight (kg)
GRCBUT 124	1/2	12.7	1/2	4	1.23
GRCBUT 126	1/2	12.7	1/2	6	1.85
GRCBUT 584	5/8	14.2	5/8	4	1.54
GRCBUT 586	5/8	14.2	5/8	6	2.31
GRCBUT 344	3/4	17.2	3/4	4	2.23
GRCBUT 346	3/4	17.2	3/4	6	3.35
GRCBUT 14	1	23.1	1	4	4.12
GRCBUT 16	1	23.1	1	6	6.09

Material
High tensile strength steel
Copper purity > 99.9%

Tested Standard
IEC 62561 Part 2
UL 467

Application
Suitable for disperse current into the earth to extend the length of ground rod by coupling.

Certified Mark
UL

Note : Special Size, Diameter, Length Copper thickness can be requested.

Copper-Bonded Ground Rod (375 micron)



Copper-Bonded Ground Rod is made by molecularly bonding pure electrolytic copper onto a low carbon, high tensile steel core with exceeding 0.375 mm (375 micron) thick. The material made of 99.9% pure electrolytic copper with high tensile steel. To ensure in safety and quality, it meets UL and IEC standard for grounding and bonding equipments.

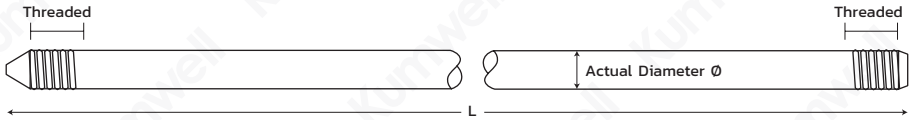

Threaded Type

Code No.	Nominal Diameter (Ø) (in)	Actual Diameter (Ø) (mm)	Threaded Size (in)	Length (ft)	Weight (kg)
GRCBT375 124	1/2	12.9	1/2	4	1.31
GRCBT375 126	1/2	12.9	1/2	6	1.96
GRCBT375 128	1/2	12.9	1/2	8	2.59
GRCBT375 1210	1/2	12.9	1/2	10	3.24
GRCBT375 584	5/8	14.3	5/8	4	1.60
GRCBT375 586	5/8	14.3	5/8	6	2.40
GRCBT375 588	5/8	14.3	5/8	8	3.17
GRCBT375 5810	5/8	14.3	5/8	10	3.97
GRCBT375 344	3/4	17.3	3/4	4	2.33
GRCBT375 346	3/4	17.3	3/4	6	3.49
GRCBT375 348	3/4	17.3	3/4	8	4.63
GRCBT375 3410	3/4	17.3	3/4	10	5.80
GRCBT375 14	1	23.3	1	4	4.19
GRCBT375 16	1	23.3	1	6	6.29
GRCBT375 18	1	23.3	1	8	8.35
GRCBT375 110	1	23.3	1	10	10.47

Material
High tensile strength steel
Copper purity > 99.9%

Tested Standard
IEC 62561 Part 2
UL 467

Application
Suitable for disperse current into the earth
to extend the length of ground rod by coupling.

Note : Special Size, Diameter, Length Copper thickness can be requested.

Copper-Bonded Ground Rod (508 micron)



Copper-Bonded Ground Rod is made by molecularly bonding pure electrolytic copper onto a low carbon, high tensile steel core with exceeding 0.508 mm (508 micron) thick. The material made of 99.9% pure electrolytic copper with high tensile steel. To ensure in safety and quality, it meets UL and IEC standard for grounding and bonding equipments.

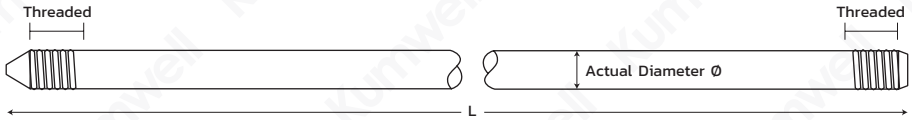

Threaded Type

Code No.	Nominal Diameter (Ø) (in)	Actual Diameter (Ø) (mm)	Threaded Size (in)	Length (ft)	Weight (kg)
GRCBT508 124	1/2	13.2	1/2	4	4.26
GRCBT508 126	1/2	13.2	1/2	6	6.40
GRCBT508 128	1/2	13.2	1/2	8	2.71
GRCBT508 1210	1/2	13.2	1/2	10	3.39
GRCBT508 584	5/8	14.6	5/8	4	1.65
GRCBT508 586	5/8	14.6	5/8	6	2.48
GRCBT508 588	5/8	14.6	5/8	8	3.30
GRCBT508 5810	5/8	14.6	5/8	10	4.14
GRCBT508 344	3/4	17.6	3/4	4	2.38
GRCBT508 346	3/4	17.6	3/4	6	3.57
GRCBT508 348	3/4	17.6	3/4	8	4.79
GRCBT508 3410	3/4	17.6	3/4	10	6.00
GRCBT508 14	1	23.6	1	4	4.26
GRCBT508 16	1	23.6	1	6	6.40
GRCBT508 18	1	23.6	1	8	8.57
GRCBT508 110	1	23.6	1	10	10.74

Material
High tensile strength steel
Copper purity > 99.9%

Tested Standard
IEC 62561 Part 2
UL 467

Application
Suitable for disperse current into the earth
to extend the length of ground rod by coupling.

Note : Special Size, Diameter, Length Copper thickness can be requested.

Coupling



For Threaded Type

Code No.	Rod (Ø) (in)	Length (mm)	Weight (kg)
GRBCO 12	1/2	60	0.07
GRBCO 58	5/8	65	0.09
GRBCO 34	3/4	70	0.14
GRBCO 1	1	90	0.25

Material
Silicon bronze

Tested Standard
IEC 62561 Part 2

Application
Extend the length of ground rod



For Standard Type

Code No.	Rod (Ø) (in)	Length (mm)	Weight (kg)
GRBCO 12NT	1/2	60	0.10
GRBCO 58NT	5/8	65	0.12
GRBCO 34NT	3/4	70	0.14
GRBCO 1NT	1	90	0.18

Material
Silicon bronze

Tested Standard
IEC 62561 Part 2

Application
Extend the length of ground rod

Driving Head



For Threaded Type

Code No.	Rod (Ø) (in)	Weight (kg)
GRBDH 12	1/2	0.06
GRBDH 58	5/8	0.09
GRBDH 34	3/4	0.16
GRBDH 1	1	0.35

Material
High tensile strength steel

Application
Protect the top of ground rod while driving.



For Standard Type

Code No.	Rod (Ø) (in)	Weight (kg)
GRDSR 12	1/2	0.13
GRDSR 58	5/8	0.16
GRDSR 34	3/4	0.19
GRDSR 1	1	0.30

Material
High tensile strength steel
Zine Plated Steel (GRDSR 5820)

Application
Protect the top of ground rod while driving.

Tip

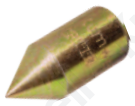

For Threaded Type

Code No.	Rod (Ø) (in)	Weight (kg)
GRTTR 12	1/2	0.025
GRTTR 58	5/8	0.030
GRTTR 34	3/4	0.070
GRTTR 1	1	0.10

Material
High tensile strength steel

Application
Protect the top of ground rod while driving.

Ground Rod Solid Copper Stainless Steel

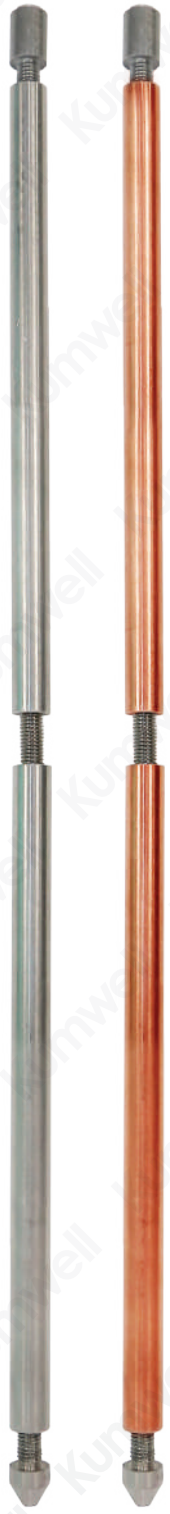

Solid Copper and Stainless Steel Ground Rod are recommended using in critical soil condition which has a pH value less than 3 or more than 8.

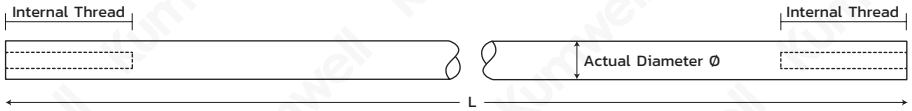

Stainless Steel

Code No.	Diameter (Ø) (mm)	Length (mm)	Weight (kg)
GRSS 1610	16	1000	1.61
GRSS 1615	16	1500	2.41
GRSS 1620	16	2000	3.22
GRSS 1630	16	3000	4.83
GRSS 2010	20	1000	2.51
GRSS 2015	20	1500	3.77
GRSS 2020	20	2000	5.03
GRSS 2030	20	3000	7.54

Material
Stainless steel 316L (ASTM A276)

Tested Standard
IEC 62561 Part 2
TIS 3024 Part 2

Application
Suitable for critical soil application which has a poor pH value.

Solid Copper

Code No.	Diameter (Ø) (mm)	Length (mm)	Weight (kg)
GRSC 1510	15	1000	1.58
GRSC 1515	15	1500	2.38
GRSC 1520	15	2000	3.17
GRSC 1530	15	3000	4.75
GRSC 1610	16	1000	1.77
GRSC 1615	16	1500	2.66
GRSC 1620	16	2000	3.55
GRSC 1630	16	3000	5.32
GRSC 2010	20	1000	2.81
GRSC 2015	20	1500	4.22
GRSC 2020	20	2000	5.63
GRSC 2030	20	3000	8.44

Material
Solid copper - (BS EN 13601)

Tested Standard
IEC 62561 Part 2
TIS 3024 Part 2

Application
Suitable for critical soil application which has a poor pH value.

Caution : When deep driving a solid copper ground rod shall be insert the rod into a bore hole. Do not hammering to the rod directly otherwise the rod might be damaged.

Note : Special Size, Diameter, Length can be requested.

Coupling



For Stainless Steel and Solid Copper Rod

Code No.	Rod (Ø) (mm)	Weight (kg)
GRSSCO 15	15	0.025
GRSSCO 16	15,16	0.025
GRSSCO 20	20	0.025

Material
Stainless steel

Application
Extend to the length of ground rod.



For Solid Copper Rod

Code No.	Rod (Ø) (mm)	Weight (kg)
GRSC 15	15	0.03
GRSC 16	15,16	0.03
GRSC 20	20	0.03

Material
High tensile strength steel
with copper plating

Application
Extend to the length of ground rod.

Driving Head



For Solid Copper and Stainless Steel Rod

Code No.	For Rod Size Diameter (Ø) (mm)	Weight (kg)
GRSDH 16	15,16	0.047
GRSDH 20	20	0.055

Material
High tensile strength steel

Application
Protect the top of ground rod.

Spike



For Solid Copper and Stainless Steel Rod

Code No.	Diameter (Ø) (mm)	Weight (kg)
GRSP 16	15,16	0.10
GRSP 20	20	0.12

Material
Stainless steel

Application
Lead the ground rod into soil

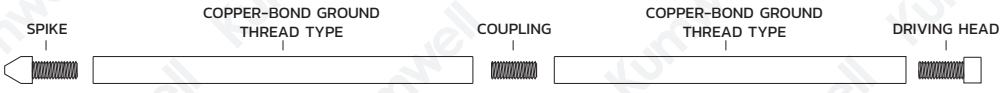

Ground Rod Driving Hammer

Code No.	Description	Weight (kg)
GHDG - SM1	Ground rod manual driving head set	17.4
GHDG - SE1	Ground rod hammer (Electric Driven)	11.8

Material
GHDG-SM1
Body – White Steel Pipe
Hammer – Steel SS 400
Extension Driving head - Steel SS 400
GHDG-SE1
Body – Black Steel Pipe

Application
GHDG - SM1 is for driving ground rod.
Provide for ground rod standard type 1/2"- 3/4" and threaded 1/2"- 3/4" nominal diameter.

GHDG - SE1 is for driving ground rod.
Provide for ground rod standard type 1/2"- 3/4" and threaded 1/2"- 3/4" nominal diameter and can be use with electric driving hammer or by manually.



GHDG-SM1



GHDG-SE1

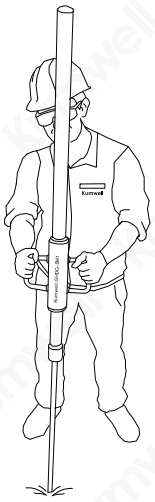

Ground rod manual driving head set
GHDG-SM1

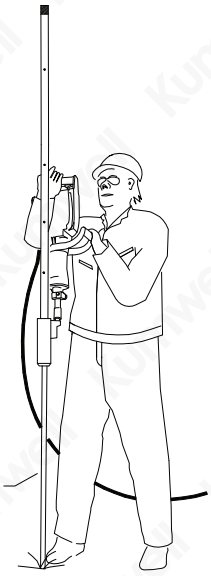

Ground rod hammer (Electric Driven)
GHDG-SE1

One Man Can Do It !

Ground Rod Electric Driving Hammer

Electric Driving Hammer

Code No.	Voltage (V)	Frequency (Hz)	Speed(No Load) (rpm)	Weight (kg)
GHDE-01	220	50	1400	15.0

Material
Electric Jackhammer

Application
The electric driving hammer system is for driving ground rod with GHDG -SE. Provide for ground rod standard type 1/2"- 3/4" and threaded 1/2"- 3/4" nominal diameter 3.00 m length.



GHDE-01

Electrolytic Grounding (KEG)



Electrolytic Grounding is made of type K copper pipe with 54 mm (2-1/8") OD diameter which natural chemical electrolytic salt can be refilled inside.

Exothermic welding is used for connecting conductor to the copper pipe.

Code No.	Rod Length (L) (ft)	Conductor Size (mm2)	Conductor Length (mm)	Rod Type
KEGV-8	8	95	500	Vertical
KEGV-10	10	95	500	Vertical
KEGV-12	12	95	500	Vertical
KEGV-15	15	95	500	Vertical
KEGH-8	8	95	500	Horizontal
KEGH-10	10	95	500	Horizontal
KEGH-12	12	95	500	Horizontal
KEGH-15	15	95	500	Horizontal

Material
Type K Copper pipe

Tested Standard
UL 467

Application
Suitable for disperse current into the earth in critical soil area

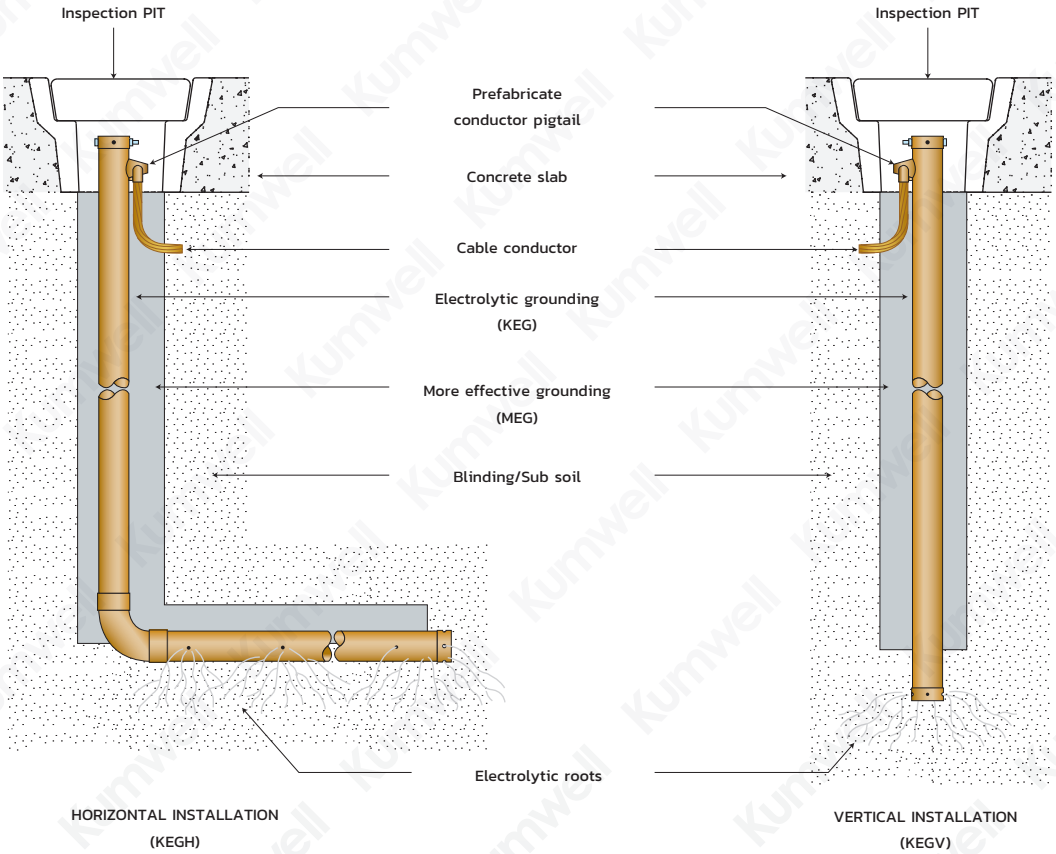

Ground Plate

Lattice Copper

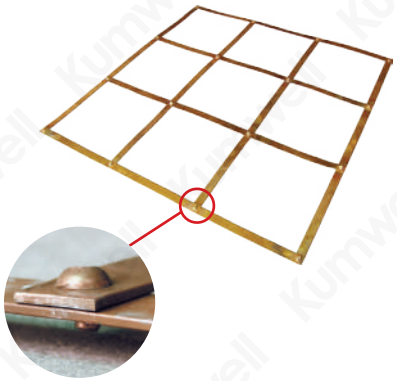

Code No.	Dimensions (mm)	Weight (kg)
GRPL 663	600x600x3	4.20
GRPL 993	900x900x3	7.20

Material
Copper - BS EN 13601

Tested Standard
IEC 62561 Part 2
TIS 3024 Part 2

Application
To minimize the danger of exposure to high step and touch voltages.

Solid Copper



Code No.	Dimensions (mm)	Weight (kg)
GRPS 6615	600x600x1.5	4.84
GRPS 6630	600x600x3	9.68
GRPS 9915	900x900x1.5	10.88
GRPS 9930	900x900x3	21.77

Material
Copper - BS EN 13601

Tested Standard
IEC 62561 Part 2
TIS 3024 Part 2

Application
Suitable for an area where unable to drive ground rod.

Copper-Bonded Steel



Code No.	Dimensions (mm)	Weight (kg)
GRPC 6615	600x600x1.5	4.25
GRPC 6630	600x600x3	8.50

Material
Copper-Bonded steel 254 micron Copper thickness

Tested Standard
IEC 62561 Part 2
TIS 3024 Part 2

Application
Suitable for an area where unable to drive ground rod.

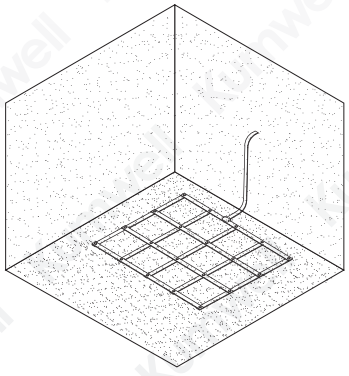

For Lattice Copper

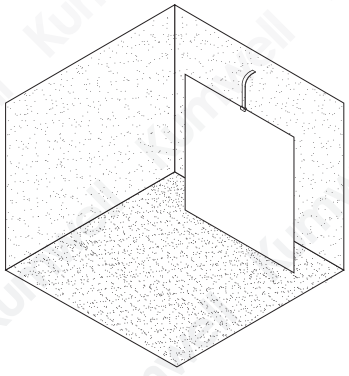

For Copper Plate

Signal Reference Ground Grid

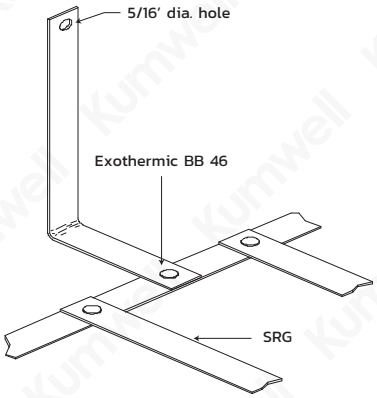

SRG Comply to IEEE Std.1100

Code No.	Length (L) (mm)	Width (W) (mm)	Spacing (mm)	Weight (kg)
GRSRG 240240	2400	2400	600	6.20
GRSRG 240480	2400	4800	600	11.66

Material
Copper - BS EN 13601

Tested Standard
IEC 62561 Part 1
TIS 3024 Part 1
(For Connection Joint)

Application
To minimize the danger of exposure to high step and touch voltages suitable for data center.

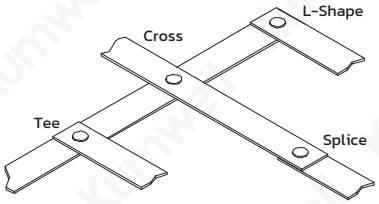

Kumwell Exothermic Welding Code BB46-C-500.5 mould and KW32 metal powder can provide Tee, Cross, L-Shape and Splice connections as shown.

Mould	Copper Strip Size (mm)	Metal Powder (g)	Handle Clamp Type
BB46-C-500.5	50x0.5	32	HCC00

Application
Using for Exothermic welding to provide Tee, Cross, L-Shape and Splice connections.

Tested Standard
UL 467



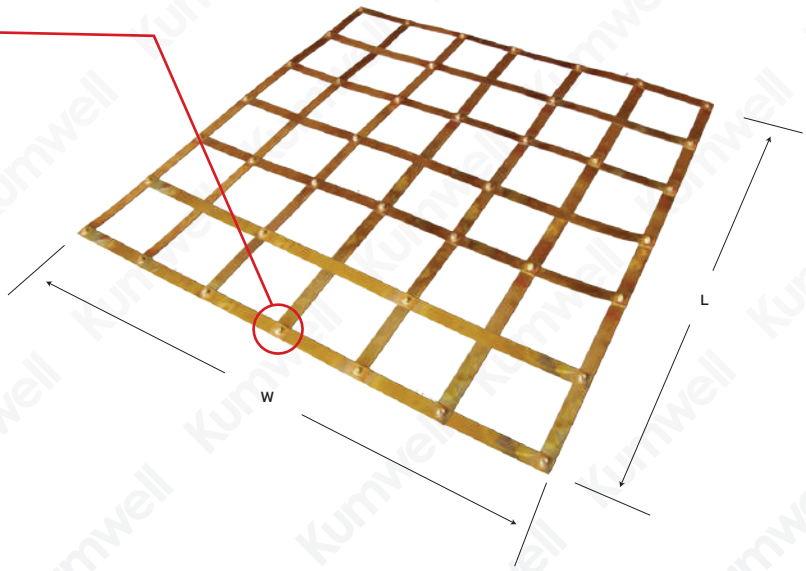

Note : Special Size can be requested.

More Effective Grounding

A Superior conductive material that improves grounding effectiveness, are a solution for special case grounding that is high resistivity soil and hard to improve, limited area, mountain area, arid area. In such case, soil treatment by Kumwell MEG

MEG is an earthing enhancing compound tested, according to IEC 62561-7 certified by DEKRA and the application is in accordance with requirements of IEEE standard 80-2013 with an extreme low resistivity 0.03 ohm-meter. (After Fully Cured)
MEG contains Portland cement, which sets within hours and fully cured within 28 days, to become a highly conductive concrete that performs in all soil conditions irrespective of the presence of water
MEG is also the answer in situations where ground rods can't be driven or where limited land area makes adequate grounding difficult with conventional methods.
MEG is maintains a constant level of superior performance once cured that will not diminish over the life of the grounding system.

Permanent

- Does not dissolve, decompose or leach out with time
- Performs in all soil conditions even during dry season and does not required replacement, periodic charging treatments and continuous presence of water to maintain its conductivity
- Reduce theft since conductors are difficult to remove after coagulation

Conform to IEC 62561-7 (Requirement for Earthing Enhancing Compounds)

- Perform the test for leaching test, sulfur determination, material resistivity and corrosion effect according to IEC 62561-7 and certified by DEKRA

Environmental

- Meet IEC 62561-7 which does not leaching any toxic, sulfur and other environmental regulation substance
- Neutral and inert with encased electrodes

Effective to Lower Resistance

- Contain of high conductive carbon and cement based to become superior conductive concrete after fully cured with resistivity 0.03 μΩm.
- Maintains constant resistance for the life of the system once in its fully cured
- Reduce grounding resistance in critical area such as rocky soil, mountain top and sandy soil
- Using MEG to coat Ground Rod conductors with a diameter of 10 cm, compared to Ground Rod can ground resistance reduction up to 40%.

Compare Resistance of Ground Rod using MEG

The Example show the soil resistance for 100 ohm-meter. Graph below show that by using Ground Rod with MEG compare to normal Ground Rod is can reduce resistance by to 40% at the length of 1 meter long. But as the depth got higher the difference is lower. Recommend that the depth should not be more than 6 meter to meet 40% reduction.

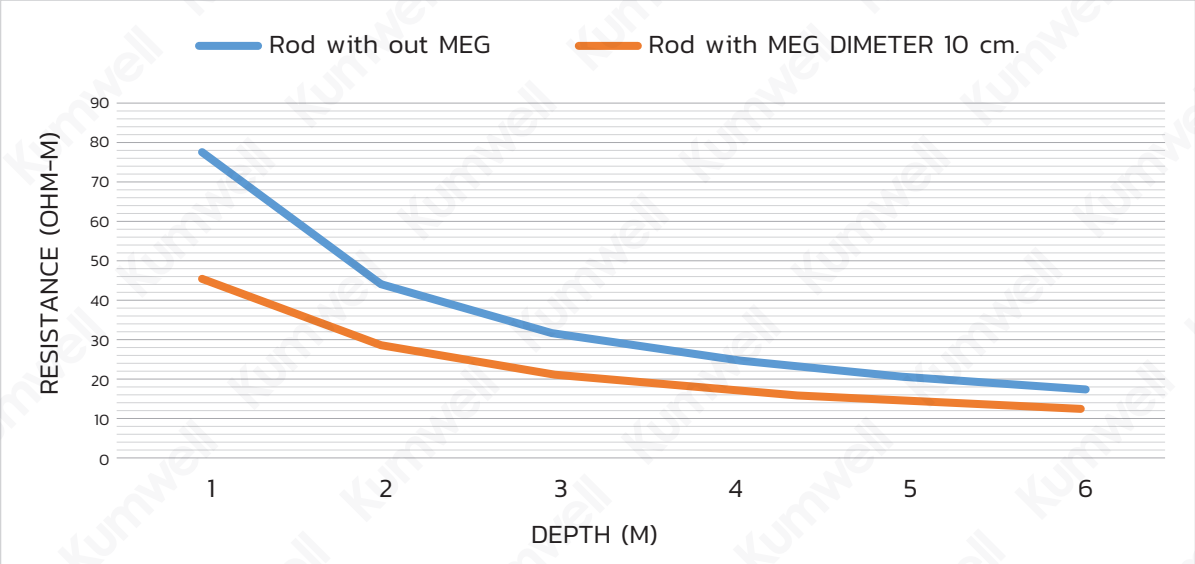

Project Reference of MEG

- Transmission Line on mountain or rocky area.
- Telecommunication Tower
- Radio Tower & TV Broadcasting Tower
- Substation
- Power Plant
- Railway Tunnel


Transmission Line


Substation


Railway Tunnel

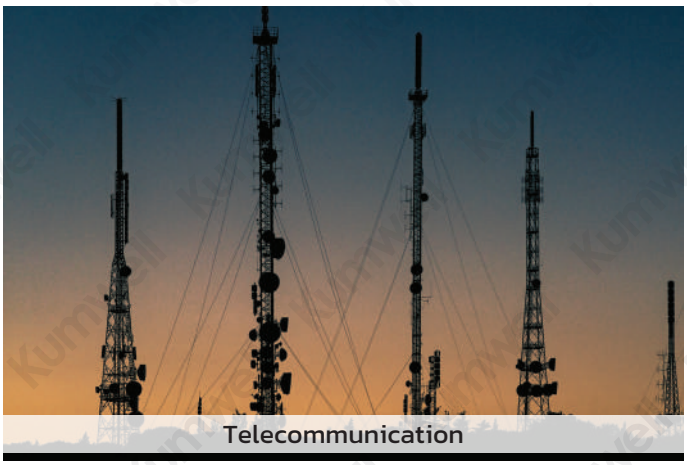
Telecommunication

More Effective Grounding (MEG)



Kumwell MEG is a ground enhancement material in accordance with requirements of IEEE Standard 80-2013 with a resistivity of 0.03 ohm-meter (Ω-m). Dose not dissolve, decompose and leach out by water. Dose not leaching any toxic, sulfur and other environmental regulation substance. MEG manufacturing is environmentally - friendly, high reliability, quality, and long shelf life.

Kumwell MEG is an alternate solution for effectively reducing ground resistance of the soil surrounding the electrode instead of adding more grid conductors or more ground rods. Soil Treatment is an effective solution to decrease ground resistance which is utilized to an advantage in poor conductivearea such as rocky soil.

- GRMEG-XX LBS is suitable for copper and stainless steel conductor.
- GRMEG-XX LBS-G is suitable for galvanized steel conductor.

Code No.	Recommended to use with Conductor Material	Weight per bag
GRMEG-25 LBS	Copper/Stainless Steel	25 lbs/11.5 kg.
GRMEG-55 LBS	Copper/Stainless Steel	55 lbs/25 kg.
GRMEG-25 LBS-G	Galvanized Steel	25 lbs/11.5 kg.
GRMEG-55 LBS-G	Galvanized Steel	55 lbs/25 kg.

Material
Body - conductive powder

Tested Standard
IEC 62561 Part 7
TIS 3024 Part 7

Application
- Reduce grounding resistance in critical area such as rocky soil, sandy soil with a resistivity of 0.03 Ω-m
- Meet IEEE Standard 80-2013
- Require simple instruction manual and tools for installation.
- Non toxic

Packing
25 LBS and 55 LBS MEG in the heavy duty bag Special packing can be requested.

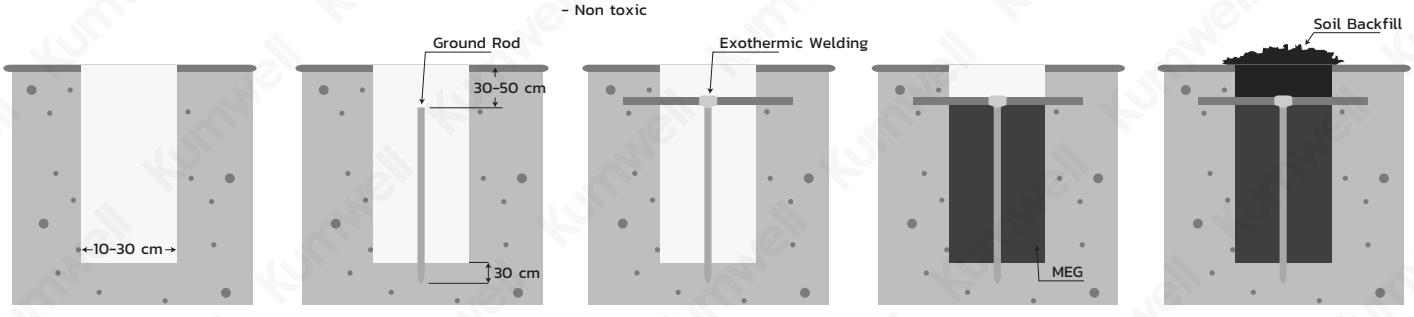

Vertical Installation

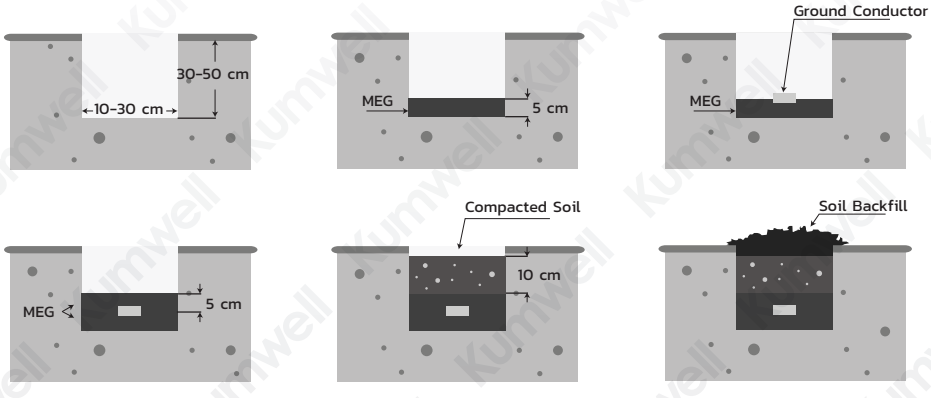

Horizontal Installation

Vertical MEG Electrode

Prefabricated MEG with Ground Rod for Ready to Install

NEW



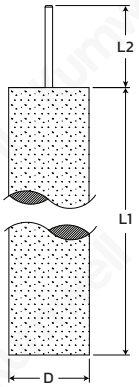

Code No.	Diameter (mm)			Rod (Ø) (in)	Weight (kg)
	L1	L2	D		
GRMEG-V5830	3000	150	150	5/8	91.18

Material
MEG - Prefabricated MEG
Rod - Copper bonded Ground Rod GRCBU 5810

Tested Standard
MEG - IEC 62561 Part 7,
TIS 3024 Part 7
Rod - IEC 62561 Part 2,
TIS 3024 Part 2

Application
- Reduce grounding resistance in critical area such as rocky soil, sandy soil with a resistivity of 0.03 Ω-m
- Meet IEEE Standard 80-2013
- Require simple instruction manual and tools for installation.
- Non toxic

Note : Special Shape, Size, Diameter, Length can be requested.

Horizontal MEG Electrode

Prefabricated MEG

NEW



Code No.	Diameter (mm)			Cable Size (mm^2)	Weight (kg)
	L	W	H		
GRMEG-H301004	1000	300	40	35-70	19.58

MEG Sealing Compound Use for sealingthe conductors after installed MEG groove.

Code No.	Material
GRMEG-C500	MEG Compound

Material
MEG - Prefabricated MEG
MEG Compound - 1 ea for 2 of GRMEG-H301004

Tested Standard
IEC 62561 Part 7
TIS 3024 Part 7

Application
- Reduce grounding resistance in critical area such as rocky soil, sandy soil with a resistivity of 0.03 Ω-m
- Meet IEEE Standard 80-2013
- Require simple instruction manual and tools for installation.
- Non toxic

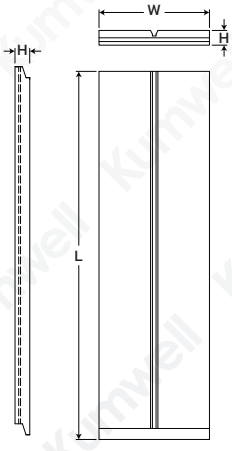

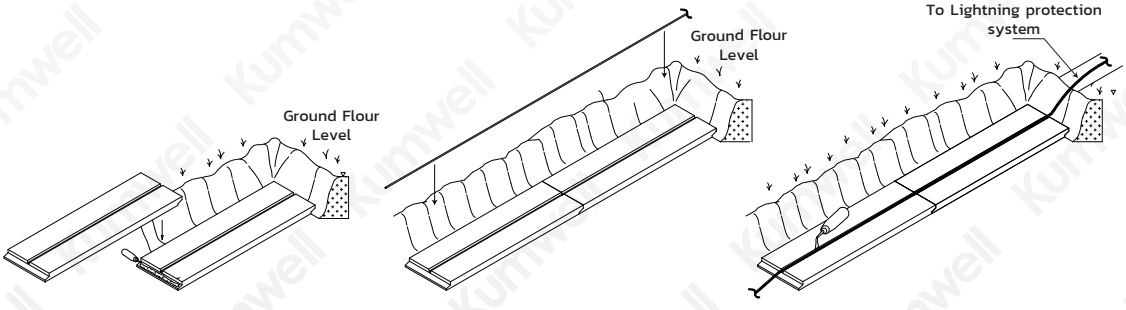

Rod to Tape Clamp



GXCT XXX-XXXX-BS



GXCT XXX-XXXX

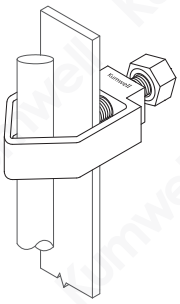

Code No.		Rod Diameter (Ø) (in)	(mm)	Max. Tape Size (mm)	Weight (kg)
GXCT 127-2512-BS	GXCT 127-2512	1/2	12.7	25x12	0.12
GXCT 127-2620-BS	GXCT 127-2620	1/2	12.7	26x20	0.13
GXCT 142-2512-BS	GXCT 142-2512	5/8	14.2	25x12	0.12
GXCT 142-2618-BS	GXCT 142-2618	5/8	14.2	26x18	0.13
GXCT 142-302-BS	GXCT 142-302	5/8	14.2	30x2	0.13
GXCT 142-4012-BS	GXCT 142-4012	5/8	14.2	40x12	0.14
GXCT 142-518-BS	GXCT 142-518	5/8	14.2	51x8	0.17
GXCT 172-2510-BS	GXCT 172-2510	3/4	17.2	25x10	0.12
GXCT 172-2610-BS	GXCT 172-2610	3/4	17.2	26x10	0.12
GXCT 172-302-BS	GXCT 172-302	3/4	17.2	30x2	0.13
GXCT 172-5112-BS	GXCT 172-5112	3/4	17.2	51x12	0.17
GXCT 231-2610-BS	GXCT 231-2610	1	23.1	26x10	0.13

Material
Copper Alloy - BS EN 1982
Bolt - Stainless Steel or Copper Alloy

Tested Standard
IEC 62561 Part 1
TIS 3024 Part 1

Application
Clamp ground rod with copper tape conductor.

Rod to Cable Clamp



GXC XXX-XXX-BS

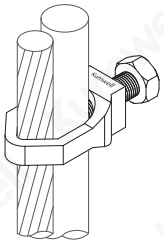



GXC XXX-XXX

Code No.		Rod Diameter (Ø) (in)	(mm)	Cable Size (mm²)	Weight (kg)
GXC 95-35-BS	GXC 95-35	3/8	9.5	25-35	0.05
GXC 127-50-BS	GXC 127-50	1/2	12.7	16-50	0.08
GXC 142-70-BS	GXC 142-70	5/8	14.2	10-70	0.04
GXC 172-95-BS	GXC 172-95	3/4	17.2	35-95	0.12
GXC 231-120-BS	GXC 231-120	1	23.1	50-120	0.14

Material
Copper Alloy - BS EN 1982
Bolt - Stainless Steel or Copper Alloy

Tested Standard
IEC 62561 Part 1
TIS 3024 Part 1

Application
Clamp ground rod with copper conductor.

Rod to Cable Lugs Clamp



GXCL XXX-BS



GXCL XXX

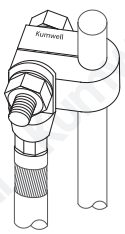

Code No.		Rod Diameter (Ø) (in)	(mm)	Weight (kg)
GXCL 127-BS	GXCL 127	1/2	12.7	0.25
GXCL 142-BS	GXCL 142	5/8	14.2	0.27
GXCL 172-BS	GXCL 172	3/4	17.2	0.32
GXCL 231-BS	GXCL 231	1	23.1	0.41

Material
Copper Alloy - BS EN 1982
Bolt, Nut - Stainless Steel or Copper Alloy

Tested Standard
IEC 62561 Part 1
TIS 3024 Part 1

Application
Clamp rod to cable lug conductor.

Rod to Cable Clamp



GXCCC XXX-XXX-US

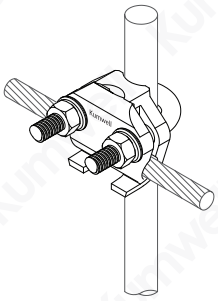



GXCCC XXX-XXX

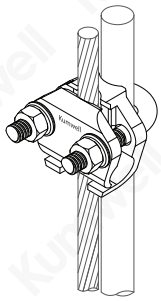

Code No.		Rod Diameter (Ø) (in)	(mm)	Cable Size (mm²)	Weight (kg)
GXCCC 142-95-US	GXCCC 142-95	5/8	14.2	16-95	0.32
GXCCC 142-185-US	GXCCC 142-185	5/8	14.2	70-185	0.37
GXCCC 142-300-US	GXCCC 142-300	5/8	14.2	150-300	0.53
GXCCC 172-70-US	GXCCC 172-70	3/4	17.2	16-70	0.32
GXCCC 172-150-US	GXCCC 172-150	3/4	17.2	70-150	0.37
GXCCC 172-300-US	GXCCC 172-300	3/4	17.2	150-300	0.53
GXCCC 231-70-US	GXCCC 231-70	1	23.1	25-70	0.37
GXCCC 231-150-US	GXCCC 231-150	1	23.1	70-150	0.32
GXCCC 231-300-US	GXCCC 231-300	1	23.1	150-300	0.53

Material
Copper Alloy - BS EN 1982
Bolt, Nut - Stainless Steel or Copper Alloy

Tested Standard
IEC 62561 Part 1
TIS 3024 Part 1

Application
Clamp ground rod through or parallel to cable conductor

Rod to Cable Clamp



GXCC XXX-XXX-US



GXCC XXX-XXX

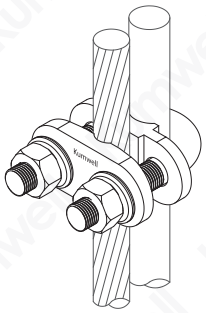

Code No.		Rod Diameter (Ø) (in)	(mm)	Cable Size (mm²)	Weight (kg)
GXCC 127-25-US	GXCC 127-25	1/2	12.7	10-25	0.21
GXCC 127-70-US	GXCC 127-70	1/2	12.7	35-70	0.21
GXCC 142-95-US	GXCC 142-95	5/8	14.2	16-95	0.22
GXCC 142-185-US	GXCC 142-185	5/8	14.2	70-185	0.24
GXCC 142-300-US	GXCC 142-300	5/8	14.2	150-300	0.31
GXCC 172-70-US	GXCC 172-70	3/4	17.2	16-70	0.22
GXCC 172-150-US	GXCC 172-150	3/4	17.2	70-150	0.24
GXCC 172-300-US	GXCC 172-300	3/4	17.2	150-300	0.31
GXCC 231-70-US	GXCC 231-70	1	23.1	16-70	0.31
GXCC 231-150-US	GXCC 231-150	1	23.1	70-150	0.38
GXCC 231-300-US	GXCC 231-300	1	23.1	150-300	0.40

Material
Copper Alloy - BS EN 1982
U Bolt, Nut - Stainless Steel or Copper Alloy

Tested Standard
IEC 62561 Part 1
TIS 3024 Part 1

Application
Clamp ground rod parallel to cable conductor

Rod or Pipe to Two Cable Clamp

Figure 1



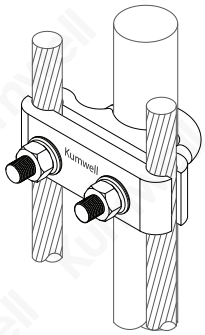

Figure 2



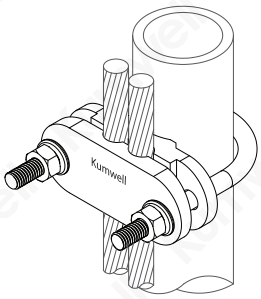

Code No.		Conductor Pipe (in)	Conductor Rod (in)	Conductor Rod (mm)	Cable Size (Sq-mm)	Weight (kg)	Figure
GXCTW 127-70-US	GXCTW 127-70	-	1/2	12.7	25-70	0.38	1
GXCTW 127-120-US	GXCTW 127-120	-	1/2	12.7	95-120	0.38	1
GXCTW 172-70-US	GXCTW 172-70	-	5/8-3/4	14.2-19.1	25-70	0.43	1
GXCTW 172-120-US	GXCTW 172-120	-	5/8-3/4	14.2-19.1	95-120	0.43	1
GXCTW 172-240-US	GXCTW 172-240	-	5/8-3/4	14.2-19.1	150-240	0.86	1
GXCTW 231-70-US	GXCTW 231-70	-	1	23.1	25-70	0.51	1
GXCTW 231-120-US	GXCTW 231-120	-	1	23.1	95-120	0.51	1
GXCTW 231-240-US	GXCTW 231-240	-	1	23.1	150-240	0.82	1
GXCTW 25-70-US	GXCTW 25-70	1	-	34.2	25-70	0.59	1
GXCTW 25-120-US	GXCTW 25-120	1	-	34.2	95-120	0.59	1
GXCTW 40-70-US	GXCTW 40-70	1¼-1½	-	42.9-48.8	25-70	0.45	2
GXCTW 40-120-US	GXCTW 40-120	1¼-1½	-	42.9-48.8	95-120	0.45	2
GXCTW 50-70-US	GXCTW 50-70	2	-	60.8	25-70	0.58	2
GXCTW 50-120-US	GXCTW 50-120	2	-	60.8	95-120	0.58	2
GXCTW 65-70-US	GXCTW 65-70	2½	-	76.6	25-70	0.83	2
GXCTW 65-120-US	GXCTW 65-120	2½	-	76.6	95-120	0.83	2
GXCTW 80-70-US	GXCTW 80-70	3	-	89.5	25-70	0.86	2
GXCTW 80-120-US	GXCTW 80-120	3	-	89.5	95-120	0.86	2

Material
Copper Alloy - BS EN 1982
U Bolt, Nut - Stainless Steel or Copper Alloy

Tested Standard
IEC 62561 Part 1
TIS 3024 Part 1

Application
Clamp rod parallel to 2 cable

Rod or Pipe to Three Cable Clamp

Figure 1



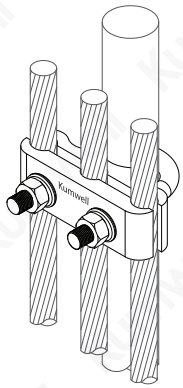

Figure 2



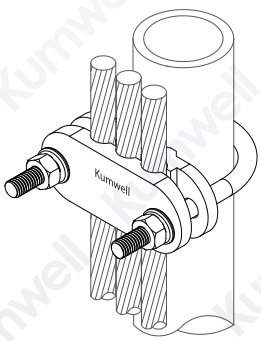

Code No.		Conductor Pipe (in)	Conductor Rod (in)	Conductor Rod (mm)	Cable Size (Sq-mm)	Weight (kg)	Figure
GXCTH 127-70-US	GXCTH 127-70	-	1/2	12.7	25-70	0.37	1
GXCTH 127-120-US	GXCTH 127-120	-	1/2	12.7	95-120	0.37	1
GXCTH 172-70-US	GXCTH 172-70	-	5/8-3/4	14.2-19.1	25-70	0.42	1
GXCTH 172-120-US	GXCTH 172-120	-	5/8-3/4	14.2-19.1	95-120	0.42	1
GXCTH 172-240-US	GXCTH 172-240	-	5/8-3/4	14.2-19.1	150-240	0.73	1
GXCTH 231-70-US	GXCTH 231-70	-	1	23.1	25-70	0.49	1
GXCTH 231-120-US	GXCTH 231-120	-	1	23.1	95-120	0.49	1
GXCTH 231-240-US	GXCTH 231-240	-	1	23.1	150-240	0.77	1
GXCTH 25-70-US	GXCTH 25-70	1	-	34.2	25-70	0.58	1
GXCTH 25-120-US	GXCTH 25-120	1	-	34.2	95-120	0.58	1
GXCTH 40-70-US	GXCTH 40-70	1¼-1½	-	42.9-48.8	25-70	0.79	1
GXCTH 40-120-US	GXCTH 40-120	1¼-1½	-	42.9-48.8	95-120	0.79	1
GXCTH 50-70-US	GXCTH 50-70	2	-	60.8	25-70	0.56	2
GXCTH 50-120-US	GXCTH 50-120	2	-	60.8	95-120	0.56	2
GXCTH 65-70-US	GXCTH 65-70	2½	-	76.6	25-70	0.81	2
GXCTH 65-120-US	GXCTH 65-120	2½	-	76.6	95-120	0.81	2
GXCTH 80-70-US	GXCTH 80-70	3	-	89.5	25-70	0.84	2
GXCTH 80-120-US	GXCTH 80-120	3	-	89.5	95-120	0.84	2

Material
Copper Alloy - BS EN 1982
U Bolt, Nut - Stainless Steel or Copper Alloy

Tested Standard
IEC 62561 Part 1
TIS 3024 Part 1

Application
Clamp rod parallel to 3 cable

U Bolt Rod Clamp



GXCTC XX-XXX-US



GXCTC XX-XXX

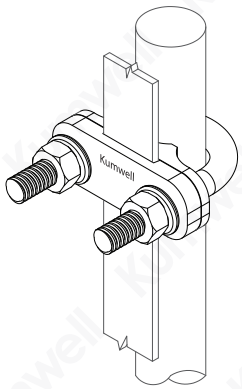

Code No.		Rod Diameter (Ø) (mm)	Tape Size (mm)	Weight (kg)
GXCTC 16-253-US	GXCTC 16-253	16	25x3	0.28
GXCTC 16-254-US	GXCTC 16-254	16	25x4	0.28
GXCTC 16-256-US	GXCTC 16-256	16	25x6	0.28
GXCTC 20-253-US	GXCTC 20-253	20	25x3	0.30
GXCTC 20-254-US	GXCTC 20-254	20	25x4	0.30
GXCTC 20-256-US	GXCTC 20-256	20	25x6	0.30
GXCTC 25-253-US	GXCTC 25-253	25	25x3	0.33
GXCTC 25-254-US	GXCTC 25-254	25	25x4	0.33
GXCTC 25-256-US	GXCTC 25-256	25	25x6	0.33
GXCTC 31-253-US	GXCTC 31-253	31	25x3	0.35
GXCTC 31-254-US	GXCTC 31-254	31	25x4	0.35
GXCTC 31-256-US	GXCTC 31-256	31	25x6	0.35
GXCTC 38-253-US	GXCTC 38-253	38	25x3	0.36
GXCTC 38-254-US	GXCTC 38-254	38	25x4	0.36
GXCTC 38-256-US	GXCTC 38-256	38	25x6	0.36
GXCTC 50-253-US	GXCTC 50-253	50	25x3	0.44
GXCTC 50-254-US	GXCTC 50-254	50	25x4	0.44
GXCTC 50-256-US	GXCTC 50-256	50	25x6	0.44

Material
Copper Alloy - BS EN 1982
U Bolt, Nut - Stainless Steel or Copper Alloy

Tested Standard
IEC 62561 Part 1
TIS 3024 Part 1

Application
Clamp rod parallel to copper tape conductor.

Pipe to Cable Clamp



GXCPC XXX-XXX-US



GXCPC XXX-XXX

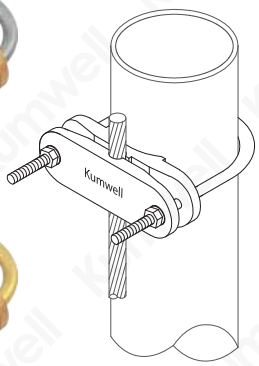

Code No.		Pipe Diameter (Ø) (in)	Cable Size (Sq-mm)	Weight (kg)
GXCPC 10-70-US	GXCPC 10-70	3/8	16-70	0.26
GXCPC 10-120-US	GXCPC 10-120	3/8	70-120	0.26
GXCPC 20-70-US	GXCPC 20-70	3/4	16-70	0.29
GXCPC 20-120-US	GXCPC 20-120	3/4	70-120	0.29
GXCPC 25-70-US	GXCPC 25-70	1	16-70	0.32
GXCPC 25-120-US	GXCPC 25-120	1	70-120	0.32
GXCPC 40-70-US	GXCPC 40-70	1¼-1½	16-70	0.54
GXCPC 40-120-US	GXCPC 40-120	1¼-1½	70-120	0.54
GXCPC 50-70-US	GXCPC 50-70	2	16-70	0.77
GXCPC 50-120-US	GXCPC 50-120	2	70-120	0.77
GXCPC 65-70-US	GXCPC 65-70	2½	16-70	0.84
GXCPC 65-120-US	GXCPC 65-120	2½	70-120	0.84
GXCPC 80-70-US	GXCPC 80-70	3	16-70	0.97
GXCPC 80-120-US	GXCPC 80-120	3	70-120	0.97
GXCPC 100-70-US	GXCPC 100-70	4	25-70	1.47
GXCPC 100-120-US	GXCPC 100-120	4	70-120	1.47

Material
Copper Alloy - BS EN 1982
U Bolt, Nut - Stainless Steel or Copper Alloy

Tested Standard
IEC 62561 Part 1
TIS 3024 Part 1

Application
Clamp pipe parallel to one cable.

Clamp A Cable to Flat Bar


GXCCF-GX-BS


GXCCF-GX

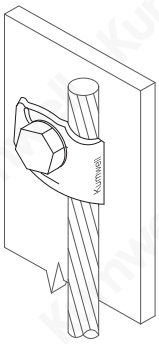

Flat Bar

Code No.		Cable Size (mm^2)	Bolt Size (in)	Weight (kg)
GXCCF-G1-BS	GXCCF-G1	25-50	3/8x1½	0.076
GXCCF-G2-BS	GXCCF-G2	70-120	1/2x2	0.136
GXCCF-G3-BS	GXCCF-G2	150-240	1/2x2	0.144

Material
Copper Alloy - BS EN 1982
Bolt, Nut - Stainless Steel or Copper Alloy

Tested Standard
IEC 62561 Part 1
TIS 3024 Part 1

Application
Clamp cable conductors to steal flat surface.


GXCCF-GXP-BS


GXCCF-GXP

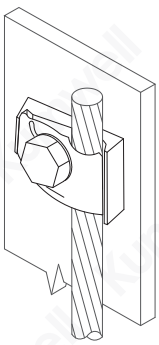

Flat Bar Clamp

Code No.		Cable Size (mm^2)	Bolt Size (in)	Weight (kg)
GXCCF-G1P-BS	GXCCF-G1P	25-50	3/8x1½	0.124
GXCCF-G2P-BS	GXCCF-G2P	70-120	1/2x2	0.194
GXCCF-G3P-BS	GXCCF-G3P	150-240	1/2x2	0.228

Material
Copper Alloy - BS EN 1982
Bolt, Nut - Stainless Steel or Copper Alloy

Tested Standard
IEC 62561 Part 1
TIS 3024 Part 1

Application
Clamp cable conductors to steal flat surface
with grooving piece in order to cable dirtortion.

Clamp Two Cable to Flat Bar


GXCCP-GX-BS


GXCCP-GX

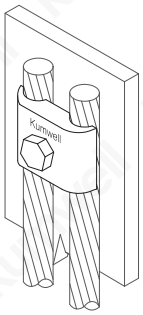

Flat Bar

Code No.		Cable Size (mm^2)	Bolt Size (in)	Weight (kg)
GXCCP-G1-BS	GXCCP-G1	25-50	3/8x1½	0.16
GXCCP-G2-BS	GXCCP-G2	70-120	1/2x2	0.24
GXCCP-G3-BS	GXCCP-G3	150-240	1/2x2	0.31

Material
Copper Alloy - BS EN 1982
Bolt, Nut - Stainless Steel or Copper Alloy

Tested Standard
IEC 62561 Part 1
TIS 3024 Part 1

Application
Clamp 2 cable conductors to steal flat surface.


GXCCP-GXP-BS


GXCCP-GXP

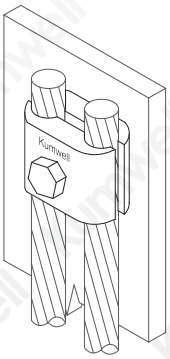

Flat Bar Clamp

Code No.		Cable Size (mm^2)	Bolt Size (in)	Weight (kg)
GXCCP-G1P-BS	GXCCP-G1P	25-50	3/8x1½	0.28
GXCCP-G2P-BS	GXCCP-G2P	70-120	1/2x2	0.39
GXCCP-G3P-BS	GXCCP-G2P	150-240	1/2x2	0.45

Material
Copper Alloy - BS EN 1982
Bolt, Nut - Stainless Steel or Copper Alloy

Tested Standard
IEC 62561 Part 1
TIS 3024 Part 1

Application
Clamp 2 cable conductors to steal flat surface with
grooving piece in order to cable dirtortion.

One Cable to Pipe Clamp



GXPCP1-XXX-XX-US



GXPCP1-XXX-XX

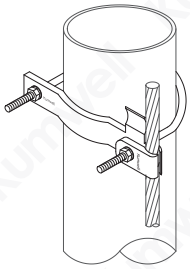

Code No.		Pipe Diameter (Ø) (in)	Cable Size (mm^2)	Weight (kg)
GXPCP1-50-95-US	GXPCP1-50-95	1¼-2	25-95	0.40
GXPCP1-75-95-US	GXPCP1-75-95	2½-3	25-95	0.52
GXPCP1-100-95-US	GXPCP1-100-95	3½-4	25-95	0.70

Material
Copper Alloy - BS EN 1982
U Bolt, Nut - Stainless Steel or Copper Alloy

Tested Standard
IEC 62561 Part 1
TIS 3024 Part 1

Application
Clamp cable conductors to steal pipe.

Pipe Bond Clamp



GBP-8-BS



GBP-8

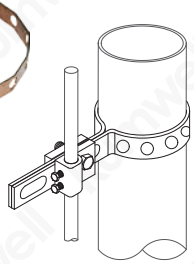

Code No.		Pipe Diameter (mm)	Conductor Type	Conductor Size (mm)	Weight (kg)
GBP-8-BS	GBP-8	50-200	Solid	8	0.59

Material
Copper Alloy - BS EN 1982
Copper Tape - BS EN 13601
Bolt, Nut - Stainless Steel or Copper Alloy

Tested Standard
IEC 62561 Part 1
TIS 3024 Part 1

Application
Bond Solid copper conductor to large metal pipe.

Tape Clamp



LPTBC-BS



LPTBC

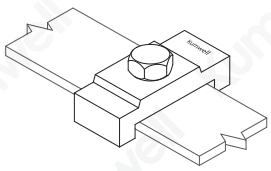

Code No.		Tape Size (mm)	Bolt Size (in)	Weight (kg)
LPTBC-BS	LPTBC	25x3	3/8	0.13
LPTBC-A		25x3	3/8	0.039

Material
Copper Alloy - BS EN 1982,
Bolt, Nut - Stainless Steel or Copper Alloy
Aluminium Alloy - BS 2898, Bolt, Nut Stainless Steel

Tested Standard
IEC 62561 Part 1
TIS 3024 Part 1

Application
Fix copper tape conductor with steal flat surface.

Cable Grid



GXCG XXX-BS



GXCG XXX

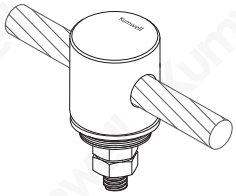

Code No.		Cable Size (mm2)	Stud Size (in)	Weight (kg)
GXCG 95-BS	GXCG 95	95	5/16	0.16
GXCG 120-BS	GXCG 120	120	5/16	0.18
GXCG 185-BS	GXCG 185	185	3/8	0.25

Material
Copper Alloy - BS EN 1982,
Stud, Nut - Stainless Steel or Copper Alloy
Washer - Bi - Copper, Aluminium

Tested Standard
IEC 62561 Part 1
TIS 3024 Part 1

Application
Clamp cable conductors to framework to earthing cable conductor.

Ground Clamp

TIS 3024
Part 2-2563



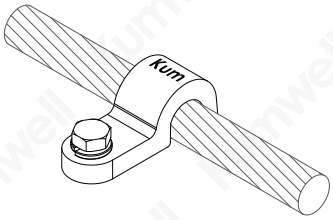

Code No.	Cable Size (mm2)	Weight (kg)
LGRC-A70	50-70	0.045
LGRC-A	95-120	0.050
LGRC-B	150-185	0.100
LGRC-C	240-300	0.120
LGRC-AA	95-120	0.015
LGRC-BA	150-185	0.031
LGRC-CA	240-300	0.036

Material
Copper Alloy - BS EN 1982
Aluminium Alloy - BS EN 2898

Tested Standard
IEC 62561 Part 4
TIS 3024 Part 4

Application
Lock wire or cable conductor on flat surface.

Certified Mark
TIS

Static Earth Receptacle



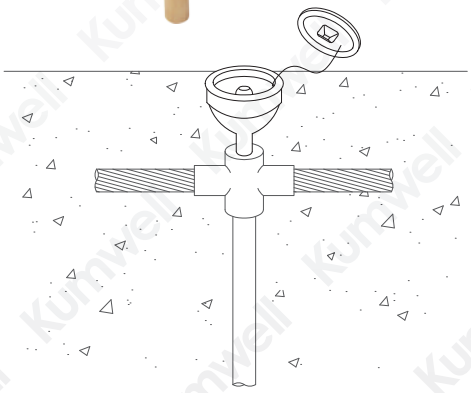

Code No.	Dimensions (mm)			Weight (kg)
	W	L	Ø	
GYSER 663	69	114	12.7	0.65
GYSER 993	120.6	158.8	12.7	1.88

Material
Copper Alloy - BS EN 1982

Tested Standard
IEC 62561 Part 1
TIS 3024 Part 1

Application
Connect to grounding system by installing runway, gas station or else to discharge static electricity from airplane or oil tank.

Earth Point

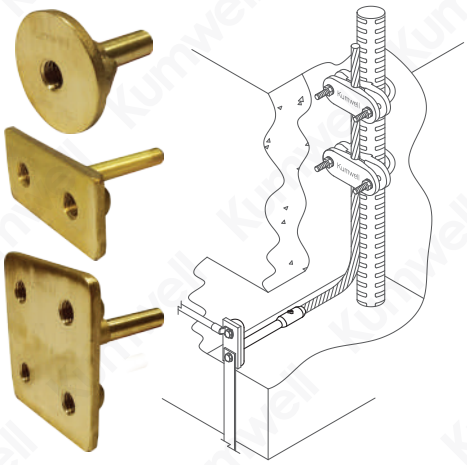

Earth Point

Code No.	No. of Hole	Stud LxWxH (in)	Weight (kg)
GXEP 120(1)	1	55xØ50	0.30
GXEP 120(2)	2	76x82.5x41	0.30
GXEP 120(4)	4	76x82.5x82.5	0.60

Material
Copper Alloy - BS EN 1982

Tested Standard
IEC 62561 Part 1
TIS 3024 Part 1

Application
Connect rebar to earth point

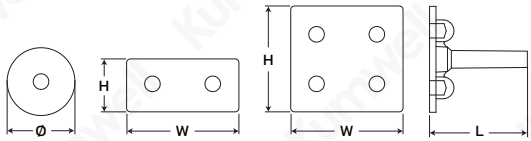

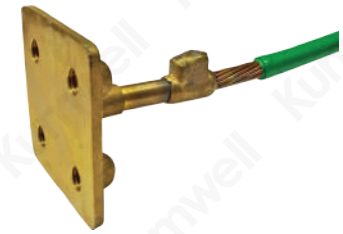

Earth Point with Prewelding

Code No.	No. of Hole	Cable with PVC		Weight (kg)
		Cable Size (mm^2)	Length (mm)	
GXEP 1201-500	1	70	500	0.77
GXEP 1202-500	2	70	500	0.72
GXEP 1202-1000	2	70	1000	1.10
GXEP 1202-3000	2	70	3000	2.50
GXEP 1204-500	4	70	500	0.90
GXEP 1204-1000	4	70	1000	1.30
GXEP 1204-3000	4	70	3000	2.20

Material
Copper Alloy - BS EN 1982
Cable - Stranded Copper with Green PVC cover
Connection - Exothermic Welding

Tested Standard
IEC 62561 Part 1
TIS 3024 Part 1

Application
Connect rebar to earth point

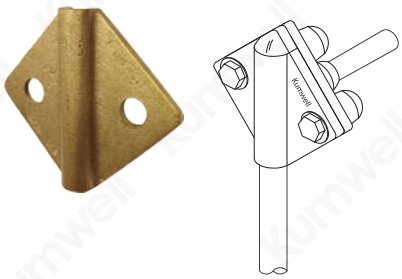

Front Cover

Code No.	Cable Size (mm^2)	Earth Point (Code No.)	Weight (kg)
GXEP 120B	70	GXEP 120(4)	0.25

Material
Copper Alloy - BS EN 1982

Application
Fix conductor on earth point

*Special cable's size of earth point with prewelding can be requested.



Stainless Steel Earth Point

Code No.	Conductor Length (L)	Thread Size	Conductor (Ø) (mm)
GXEP 801-SS-M10-150	150	M10	10
GXEP 801-SS-M10-400	400	M10	10
GXEP 801-SS-M10-600	600	M10	10

Material
Body : Stainless Steel 304
Tail : Galvanized Steel

Tested Standard
IEC 62561 Part 1
TIS 3024 Part 1

Application
Fix conductor on earth point

Note : IEC has recommended to use double connector for every connection to earth point for safety and reliability of the system.

Earth Boss



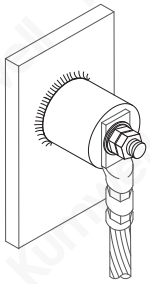

Code No.	Diameter (Ø) (mm)	L (mm)	Stud Size	Weight (kg)
GXEAB	50	45	M10	0.73
GXEAB-MS	50.8	45	M10	0.75

Material
Stainless Steel - 304 (GXEAB)
Mild Steel (GXEAB-MS)
Stud, Nut - Stainless Steel

Application
Weld onto steel vessel, tank or other structure for bonding point in grounding & lightning protection

Connector Screw Type



LXCNS XXX-XXX-BS



LXCNS XXX-XXX

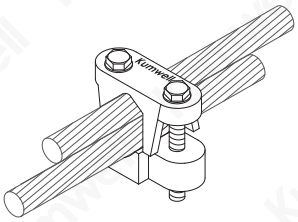

Code No.		Cable Size (mm^2) Run	Cable Size (mm^2) Tap	Bolt Size (in)	Weight (kg)
LXCNS 16-35-BS	LXCNS 16-35	16-35	4-35	1/4x1	0.08
LXCNS 50-70-BS	LXCNS 50-70	50-70	4-70	1/4x1½	0.10
LXCNS 95-120-BS	LXCNS 95-120	95-120	4-120	5/16x2	0.16
LXCNS 150-185-BS	LXCNS 150-185	150-185	4-185	3/8x2	0.39

Material
Copper Alloy - BS EN 1982
Bolt - Stainless Steel or Copper Alloy

Tested Standard
IEC 62561 Part 1
TIS 3024 Part 1

Application
Suitable for joint copper conductor (above ground).

Eye Bolt



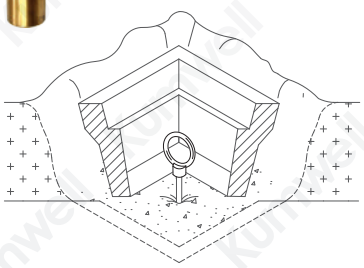

Code No.	Thread (in)	Weight (kg)
GXEYB 58	5/8	0.41
GXEYB 34	3/4	0.52

Material
Copper Alloy - BS EN 1982

Application
Connect with ground rod as a static earth point in grounding system

Flexible Copper Braid Bond

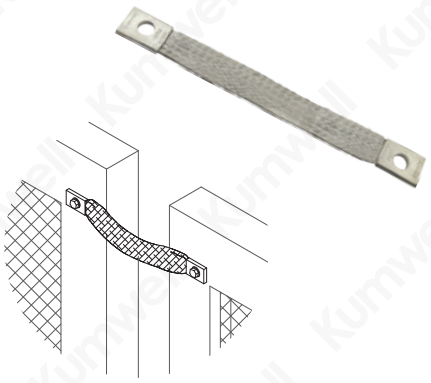

Copper Braid with Tinned (1 Hole)

Code No.	Amp Rating (A)	No. of Layer	Length (mm)	Cross Section (mm^2)	Weight (kg)
LZFCB 502001	200	1	200	50	0.18
LZFCB 503001	200	1	300	50	0.24
LZFCB 504001	200	1	400	50	0.29
LZFCB 501012	250	1	254	50	0.13
LZFCB 501212	250	1	305	50	0.19
LZFCB 501412	250	1	356	50	0.26
LZFCB 501612	250	1	406	50	0.33

Material
High conductivity tinned copper braid.
DIN 46438 ASTM B49-2020

Tested Standard
IEC 62561 Part 1
TIS 3024 Part 1

Application
Suitable for bonding of metal door, gate, fence, etc., where flexibility is required or the bond is subject to movements.

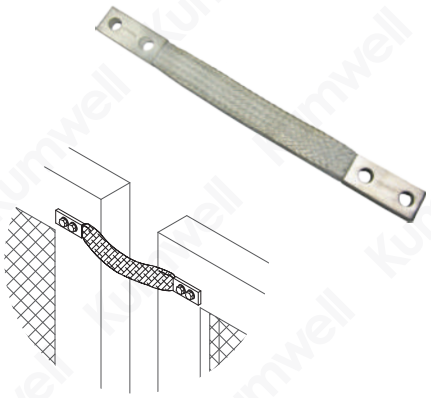

Copper Braid with Tinned (2 Hole)

Code No.	Amp Rating (A)	No. of Layer	Length (mm)	Cross Section (mm^2)	Weight (kg)
LZFTB 353501	150	1	350	35	0.22
LZFTB 503501	200	1	350	50	0.18
LZFTB 703501	250	1	350	70	0.25
LZFTB 953501	300	1	350	95	0.35
LZFTB 1203501	360	1	350	120	0.42
KGZFCB 39533	700	3	386	150	0.60

Material
High conductivity tinned copper braid.
DIN 46438 ASTM B49-2020

Tested Standard
IEC 62561 Part 1
TIS 3024 Part 1

Application
Suitable for bonding of metal door, gate, fence, etc., where flexibility is required or the bond is subject to movements.

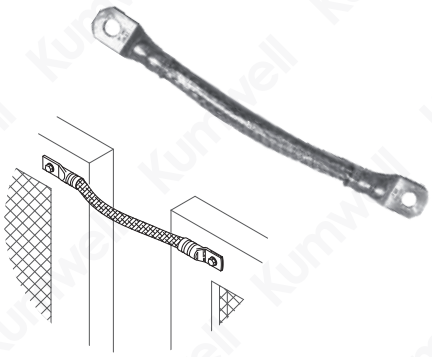

Copper Braid with Tinned (Round Type)

Code No.	Amp Rating (A)	Length (mm)	Cross Section (mm^2)	Weight (kg)
GRB20-350	480	350	150	0.73
GRB20-1000	480	1000	150	2.15

Material
High conductivity tinned copper braid.
DIN 46438 ASTM B49-2020

Tested Standard
IEC 62561 Part 1
TIS 3024 Part 1

Application
Suitable for bonding of metal door, gate, fence, etc., where flexibility is required or the bond is subject to movements.

*Special size can be requested.

Expansion Braid Bond



Code No.	Length (L) (mm)	Cross Section (mm^2)	Weight (kg)
LXEBB 200	200	50	0.42
LXEBB 300	300	50	0.62

Material
High conductivity tinned copper braid.
Bolt - Stainless Steel
DIN 46438 ASTM B49-2020

Tested Standard
IEC 62561 Part 1
TIS 3024 Part 1

Application
Suitable for bonding of metal door, gate, fence, etc., where flexibility is required or the bond is subject

Grounding Test Box

Aluminium enclosure



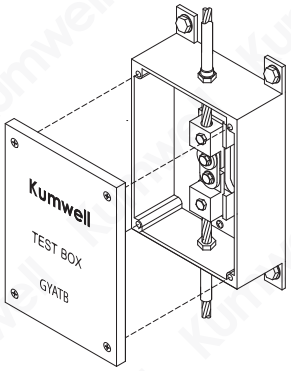

Code No.	Connection	Cable Size (mm²)	Tape Size (mm²)	Dimensions (mm) L	W	H	Weight (kg)
GYATB	Copper-Copper	50-120	25x3	265	153	70	2.40
GYATB-AC	Aluminium-Copper	50-120	25x3	265	153	70	2.40
GYATB-AA	Aluminium-Aluminium	50-120	25x3	265	153	70	2.40

Material
Box-Cast Aluminium Alloy IP65
Bolt-Stainless Steel
Terminal - Copper Alloy (GYATB)
Disconnecting - Copper Alloy with Tin Plated (GYATB)
Terminal - Aluminium Alloy/ Copper Alloy (GYATB-AC)
Disconnecting - Copper Alloy with Tin Plated (GYATB-AC)
Terminal - Aluminium Alloy (GYATB-AA)
Disconnecting-Aluminium Alloy (GYATB-AA)

Tested Standard
IEC 62561 Part 1
TIS 3024 Part 1

Application
Suitable for inspection and testing point in grounding system

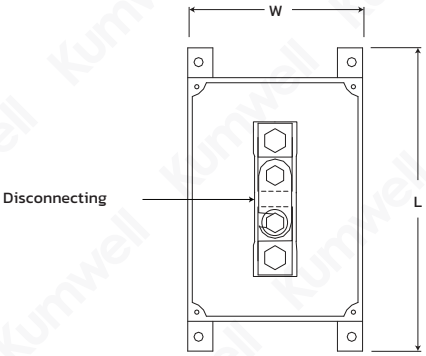

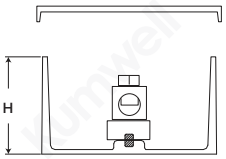

ABS enclosure



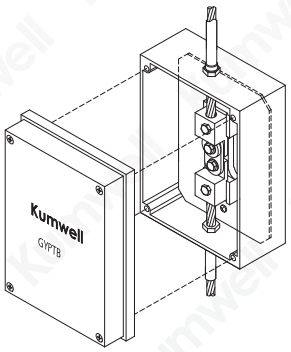

Code No.	Connection	Cable Size (mm²)	Tape Size (mm²)	Dimensions (mm) L	W	H	Weight (kg)
GYPTB	Copper-Copper	50-120	25x3	200	150	100	1.10
GYPTB-AC	Aluminium-Copper	50-120	25x3	200	150	100	1.10
GYPTB-AA	Aluminium-Aluminium	50-120	25x3	265	153	70	1.10

Material
Box-ABS IP65
Bolt-Stainless Steel
Terminal - Copper Alloy (GYPTB)
Disconnecting - Copper Alloy with Tin Plated (GYPTB)
Terminal - Aluminium Alloy/ Copper Alloy (GYPTB-AC)
Disconnecting - Copper Alloy with Tin Plated (GYPTB-AC)
Terminal - Aluminium Alloy (GYPTB-AA)
Disconnecting-Aluminium Alloy (GYPTB-AA)

Tested Standard
IEC 62561 Part 1
TIS 3024 Part 1

Application
Suitable for inspection and testing point in grounding system

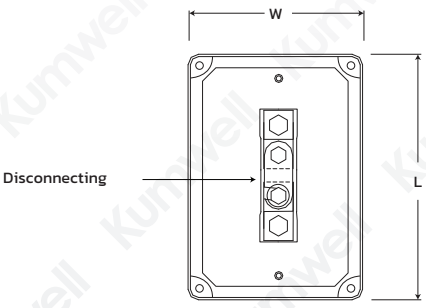

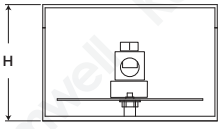

Cable-Tape Test Connector



LPCTTC-XXX-XXX-BS



LPCTTC-XXX-XXX

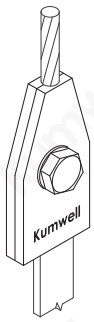

Code No.		Conductor Size (mm)	Tape Size (mm)	Weight (kg)
LPCTTC-C-BS	LPCTTC-C	8	25x3	0.31

Code No.		Conductor Size (Sq mm²)	Tape Size (mm)	Weight (kg)
LPCTTC-70-253-BS	LPCTTC-70253	70	25x3	0.31
LPCTTC-70-253A		70	25x3	0.085
LPCTTC-95-253-BS	LPCTTC-95253	95	25x3	0.37
LPCTTC-120-253-BS	LPCTTC-120253	120	25x3	0.37

Material
Copper Alloy - BS EN 1982,
Bolt - Stainless Steel or Copper Alloy

Tested Standard
IEC 62561 Part 1
TIS 3024 Part 1

Application
Connect copper stranded or solid with copper tape conductors.

Cable Test Connector


LCATT XX-XXX-BS


LCATT XX-XXX

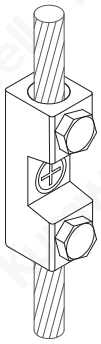

Code No.		Cable Size (mm²)	Material	Weight (kg)
LCATT 50-70-BS	LCATT 50-70	50-70	Copper Alloy	0.192
LCATT 95-120-BS	LCATT 95-120	95-120	Copper Alloy	0.157
LCATT 50-70T		50-70	Copper Alloy with Tin Plated	0.192
LCATT 95-120T		95-120	Copper Alloy with Tin Plated	0.157
LCATT 50-70A		50-70	Aluminium Alloy	0.075
LCATT 95-120A		95-120	Aluminium Alloy	0.065

Material
Copper Alloy with Tin Plated,
Bolt - Stainless Steel or Copper Alloy
Aluminium Alloy - BS 2898, Bolt - Stainless Steel

Tested Standard
IEC 62561 Part 1
TIS 3024 Part 1

Application
Connect copper stranded or solid conductors.

Tape Test Connector



LTCT XXX-BS



LTCT XXX

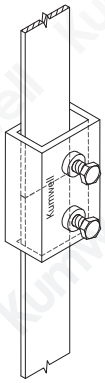

Code No.		Maximum Tape Size (mm)	Material	Weight (kg)
LTCT 256-BS	LTCT 256	26x8	Copper Alloy	0.236
LTCT 256T		26x8	Copper Alloy with Tin Plated	0.236
LTCT 506-BS	LTCT 506	51x8	Copper Alloy	0.425
LTCT 256A		26x8	Aluminium Alloy	0.072
LTCT 506A		51x8	Aluminium Alloy	0.128

Material
Copper Alloy - BS EN 1982,
Bolt - Stainless Steel or Copper Alloy
Aluminium Alloy - BS 2898, Bolt - Stainless Steel

Tested Standard
IEC 62561 Part 1
TIS 3024 Part 1

Application
Connect copper or aluminium tape conductors.

Ground Bar

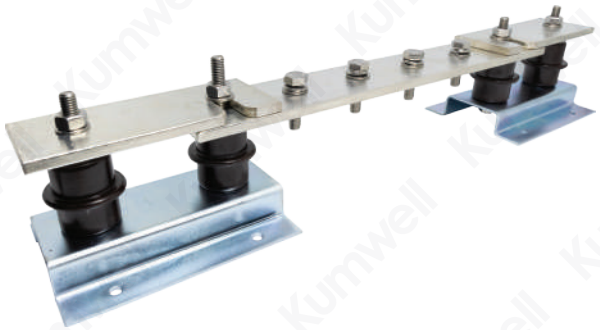

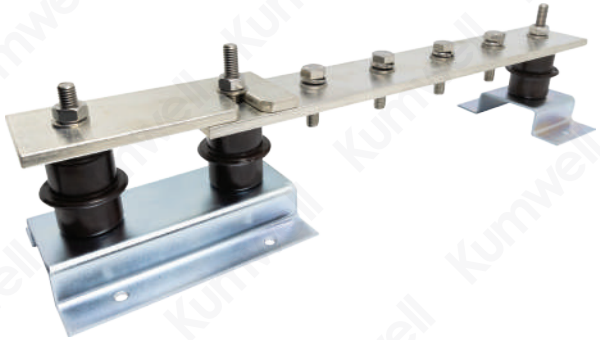



Kumwell Ground Bars are an efficient and convenient way of providing a common grounding and bonding point, integral with disconnecting links allow easy isolation for testing purposes.

The standard type of ground bars are available in a various of lengths, consist of a width 50 mm and 100 mm by 6 mm thick tinned copper bar.

The new design provided self-threaded tinned copper bar with M8 stainless bolts, no nuts required, easy to installation.

Kumwell Ground Bars has tested IEC 62561 Part 1 and TIS 3024 Part 1 (Requirements for Connection Components).

The test had to require conditioning/aging, electrical test, and static mechanical test. Thus, you can trust the superior connection and electrical continuity between ground bar and ground conductors is effectively in grounding and bonding system.

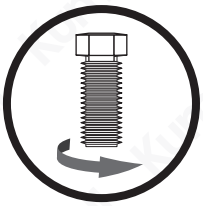

Superior Connection

Bolts for self-threaded bar ensure lightning capability as per IEC 62561-1 (for GBDL Model)



Quick Installation

No additional nuts required (for GBDL Model)

Ground Bar

Twin Disconnecting Link

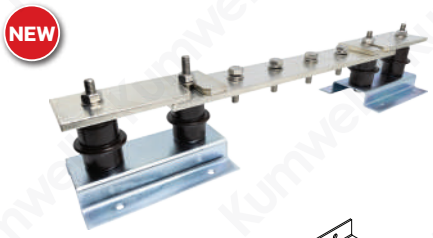

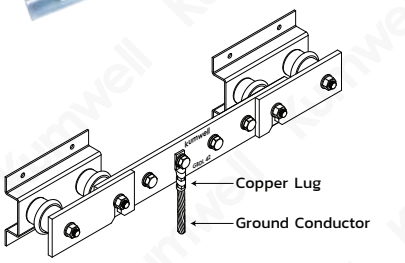

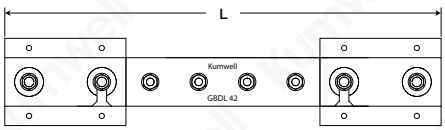

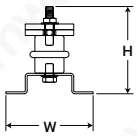

Code No.	No. of Terminal	Dimensions (mm) L	W	H	Weight (kg)
GBDL 42	4	450	90	90	2.80
GBDL 62	6	550	90	90	2.80
GBDL 82	8	650	90	90	3.20
GBDL 102	10	800	90	90	3.80
GBDL 122	12	900	90	90	4.20
GBDL 142	14	1000	90	90	4.60
GBDL 162	16	1100	90	90	5.00
GBDL 182	18	1200	90	90	5.40
GBDL 202	20	1350	90	90	6.00
GBDL 222	22	1450	90	90	6.40
GBDL 242	24	1550	90	90	6.80
GBDL 262	26	1650	90	90	7.20
GBDL 282	28	1850	90	90	7.90
GBDL 302	30	2000	90	90	8.30

Material
Busbar - Tin Plated Copper - BS EN 13601
Support - Zinc Plated Steel with Insulator
Bolt M8 - Stainless Steel. All the above products consist of 50x6 mm copper bar.
Fix using wood screws 1½" x no.10

Tested Standard
IEC 62561 Part 1
TIS 3024 Part 1

Application
Suitable for bonding and testing point in grounding system.

Note : Special Size Length can be requested.

Single Disconnecting Link

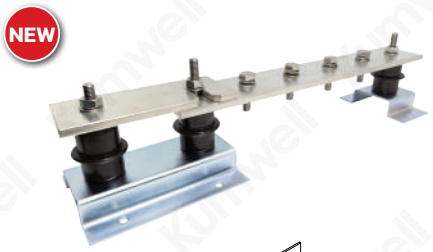

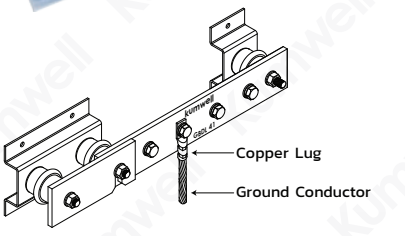

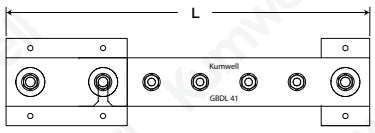

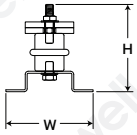

Code No.	No. of Terminal	Dimensions (mm) L	W	H	Weight (kg)
GBDL 41	4	375	90	90	1.71
GBDL 61	6	475	90	90	2.08
GBDL 81	8	575	90	90	2.41
GBDL 101	10	725	90	90	3.17
GBDL 121	12	825	90	90	3.61
GBDL 141	14	925	90	90	4.05
GBDL 161	16	1025	90	90	4.49
GBDL 181	18	1125	90	90	4.92
GBDL 201	20	1275	90	90	5.58
GBDL 221	22	1375	90	90	6.02
GBDL 241	24	1475	90	90	6.45
GBDL 261	26	1575	90	90	6.89
GBDL 281	28	1675	90	90	7.33
GBDL 301	30	1775	90	90	7.77

Material
Busbar - Tin Plated Copper - BS EN 13601
Support - Zinc Plated Steel with Insulator
Bolt M8 - Stainless Steel. All the above products consist of 50x6 mm copper bar.
Fix using wood screws 1½" x no.10

Tested Standard
IEC 62561 Part 1
TIS 3024 Part 1

Application
Suitable for bonding and testing point in grounding system.

Note : Special Size Length can be requested.

Ground Bar

Without Disconnecting Link



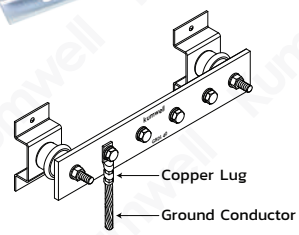

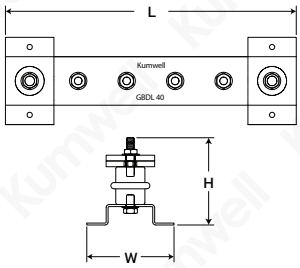

Code No.	No. of Terminal	Dimensions (mm) L	W	H	Weight (kg)
GBDL 40	4	300	90	90	1.20
GBDL 60	6	400	90	90	1.52
GBDL 80	8	500	90	90	1.90
GBDL 100	10	650	90	90	2.37
GBDL 120	12	750	90	90	2.86
GBDL 140	14	850	90	90	3.24
GBDL 160	16	950	90	90	3.62
GBDL 180	18	1050	90	90	4.00
GBDL 200	20	1200	90	90	4.57
GBDL 220	22	1300	90	90	4.95
GBDL 240	24	1400	90	90	5.33
GBDL 260	26	1500	90	90	5.71
GBDL 280	28	1600	90	90	6.10
GBDL 300	30	1700	90	90	6.48

Material
Busbar - Tin Plated Copper - BS EN 13601
Support - Zinc Plated Steel with Insulator
Bolt M8 - Stainless Steel. All the above products consist of 50x6 mm copper bar.
Fix using wood screws 1½" x no.10

Tested Standard
IEC 62561 Part 1
TIS 3024 Part 1

Application
Suitable for bonding and testing point in grounding system.

Note : Special Size Length can be requested.

Disconnecting Link



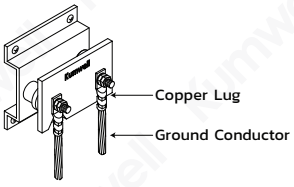

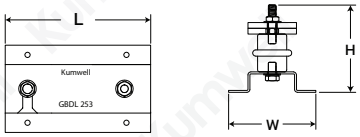

Code No.	Dimensions (mm) L	W	H	Weight (kg)
GBDL 253	125	90	90	0.91

Material
Tin Plated Copper Bar - BS EN 13601
Support - Zinc Plated Steel with Insulator
STUD M8 - Stainless Steel. All the above products consist of 50x6 mm copper bar.
Fix using wood screws 1½" x no.10

Tested Standard
IEC 62561 Part 1
TIS 3024 Part 1

Application
Suitable for bonding and testing point in grounding system.

Ground Bar

Main Ground Station



Code No.	No. of Hole	Ø Hole (mm)	Busbar (mm)	Dimensions (mm) L	W	H	Weight (kg)
GBPGSS-6D	12	14.3	350x100x6	350	148	83	2.24
GBPGSS-8D	16	14.3	440x100x6	440	148	83	2.82
GBPGSS-12D	24	14.3	610x100x6	610	148	83	3.90

Material
Copper - BS EN 13601
Tin Plated Copper - BS EN 13601
Support - Hot Dip Galvanized with Insulator
Bolt - Stainless Steel

Tested Standard
IEC 62561 Part 1
TIS 3024 Part 1

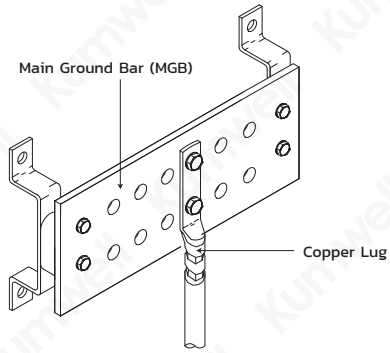

Application
Connect ground conductor wires to earth electrode

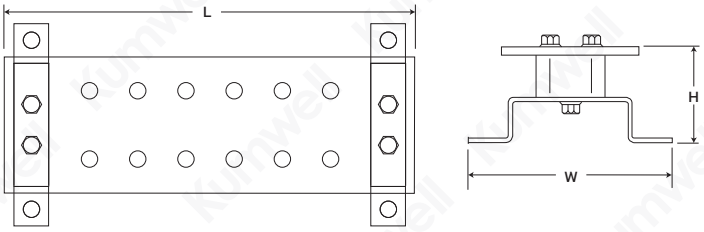

Telecommunication / Communication Ground Station

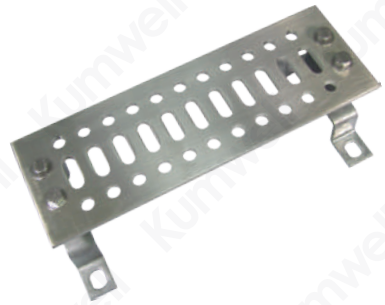

Code No.	No. of Hole	Ø Hole (mm)	Busbar (mm)	Dimensions (mm) L	W	H	Weight (kg)
GBCGSS-200	6	10	200x100x6	200	148	84	1.38
GBCGSS-300	11	10	300x100x6	300	148	84	1.60
GBCGSS-400	15	10	400x100x6	400	148	84	1.80
GBCGSS-450	18	10	450x100x6	450	148	84	2.40
GBCGSS-600	24	10	600x100x6	600	148	84	3.20

Material
Copper - BS EN 13601
Tin Plated Copper - BS EN 13601
Support - Hot Dip Galvanized with Insulator
Bolt - Stainless Steel

Tested Standard
IEC 62561 Part 1
TIS 3024 Part 1

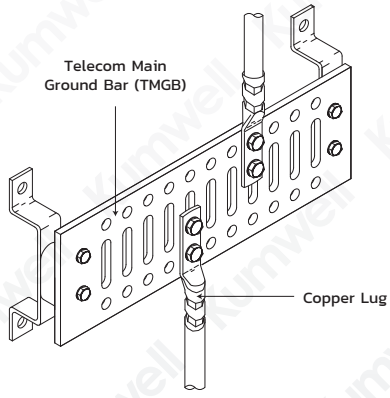

Application
Connect ground conductor wires to earth electrode

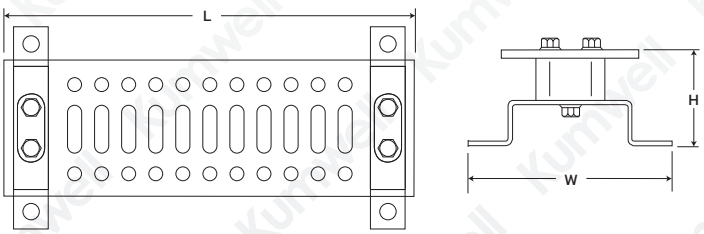

Ground Bar

For Bonding and Equipotential

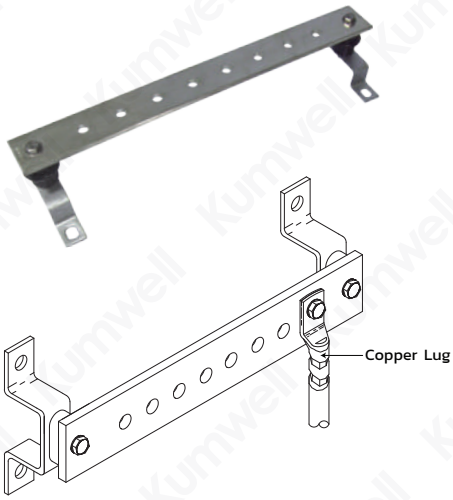

Code No.	No. of Hole	Ø Hole (mm)	Busbar (mm)	Dimensions (mm) L	W	H	Weight (kg)
GBPGSS-6	6	14.3	350x50x6	350	148	75	1.28
GBPGSS-8	8	14.3	440x50x6	440	148	75	1.50
GBPGSS-12	12	14.3	610x50x6	610	148	75	1.80

Material
Tin Plated Copper - BS EN 13601
Support - Hot Dip Galvanized with Insulator
Bolt - Stainless Steel

Tested Standard
IEC 62561 Part 1
TIS 3024 Part 1

Application
Connect ground conductor wires to ground electrode

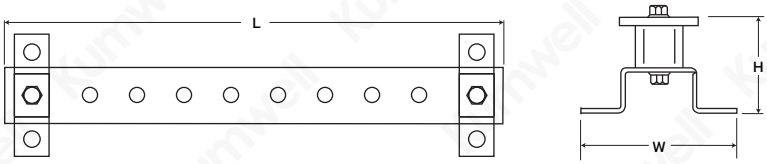

Equipotential Bonding Bar



Code No.	Dimensions (mm) L	W	H	Weight (kg)
GBE-7DC16-T305D10-D10	188	52	44	0.24

Material
Cover, Base - Plastic
Bar - Brass
Clamp, Screw, Bolt - Zinc Plated Steel

Tested Standard
IEC 62561 Part 1
TIS 3024 Part 1

Application
Connect ground conductor wires or tape to ground electrode.
Terminal:
1 x Solid Conductor 8-10 mm or Stranded Conductor 25-50 mm²
7 x Stranded Conductor 2.5-16 mm²
1 x Tape size up 30x5 mm

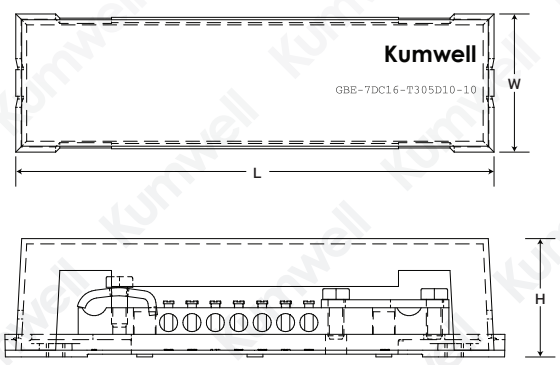

Inspection Pit

The main purpose of the inspection pit is to indicate the ground rod position and to check the area between the ground rod and the ground wire connection. It also can act as a testing point for earth resistance; this is another convenient solution for those who demands ground rods installation.

The installation of the inspection pit requires working site inspection and IEC 62561-5 standard test compliance. Kumwell have 2 types of testing compliance with IEC 62561-5 as below.

Application for inspection pit

FOR HOUSE

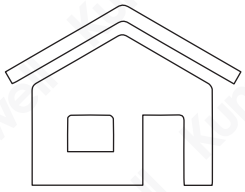

- Light weight, easy for transportation and installation.
- Green cover can be match with a grass.
- Grey cover can be match with concrete.
- Suitable for house or walkways.



FOR BUILDING & FACTORY

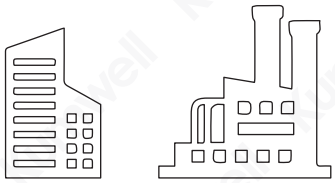

- Different material for using. (Concrete, Iron Cast, High-grade polypropylene)
- Suitable for building or factory.



FOR POWER PLANT AND OIL & GAS PLANT

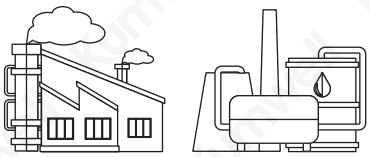

- Can be dissembled, easy for transportation and installation.
- Reduce extra cost for transportation.
- Suitable for heavy industries, petrochemical plant, and heavy vehicle traffic.



ABS Inspection Pit

NEW



GXPIP-GR



GXPIP-GY

Kumwell Light duty inspection pit. made from high strength polymer UV-stabilized which complied standard test IEC 62561 part 5 light duty. ABS inspection pit can provide easy transportation and installation. Can be stack up to extend the depth of pit with specific base. A green cover can be match with a grass and grey cover match with concrete. Suitable for house or walkways.

Code No.	Dimensions (mm) D1	D2	H	Cover Color	Weight (kg)
GXPIP-GR	130	150	120	Green	0.24
GXPIP-GY	130	150	120	Grey	0.24

Material
Body – Poly Plastic (Black)
Cover – ABS

Tested Standard
IEC 62561 Part 5 – Light Duty Type
TIS 3024 Part 5 – Light Duty Type

Application
Inspection and Testing point in grounding system.
For housing installation can take the load test for 4,000 N. (400 kg.)

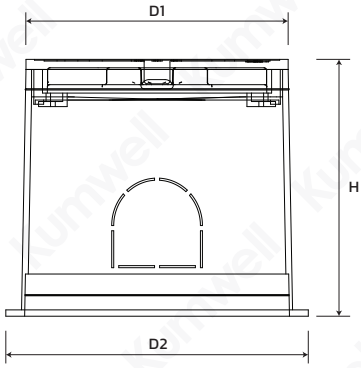



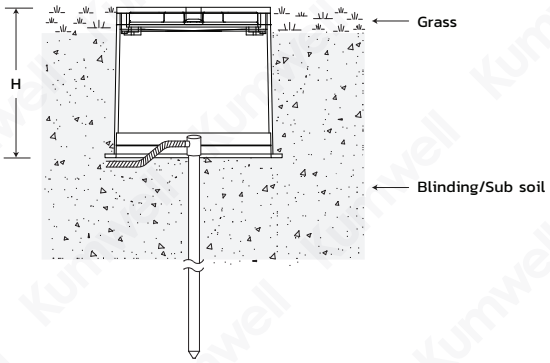

Base for ABS Inspection Pit



Code No.	Dimensions (mm) D1	D2	H	Weight (kg)
GXPIP-02	130	150	117	0.17

Material
Body – Poly Plastic (Black)

Application
Inspection and testing point in grounding system.
For housing installation can take the load test for 4,000 N. (400 kg.)

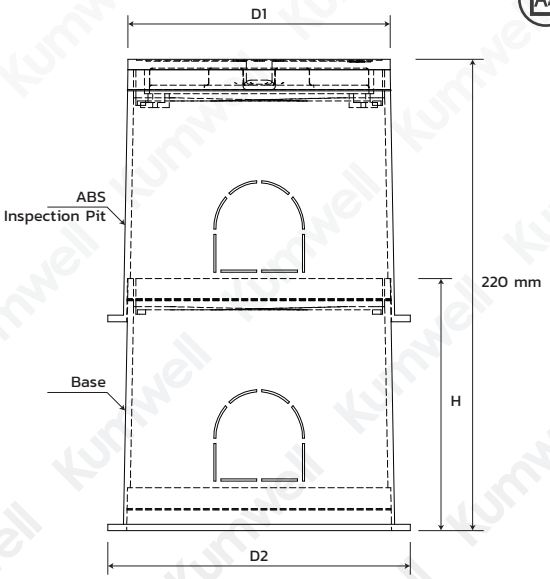

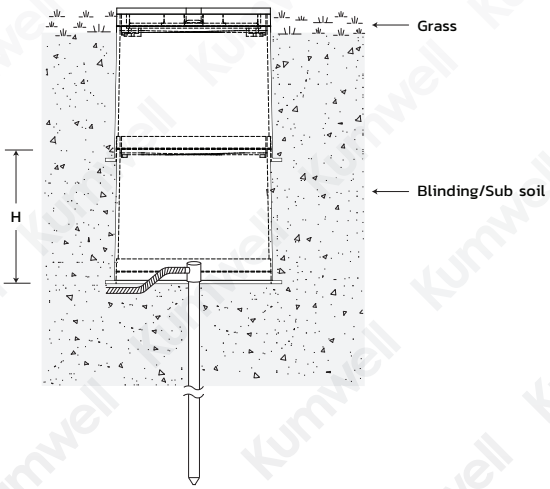

Concrete Inspection Pit

Standard Type

TIS 3024
Part 2-2563



GXCIP

Code No.	Dimensions (mm) L	W	H	Weight (kg)
GXCIP	310	310	192	21.5

Material
Concrete

Tested Standard
IEC 62561 Part 5 – Heavy Duty Type
TIS 3024 Part 5 – Heavy Duty Type

Application
Inspection and testing point in grounding system.
Provide high compressive strength up to 60,000 N (6,000 kg).

Certified Mark
TIS

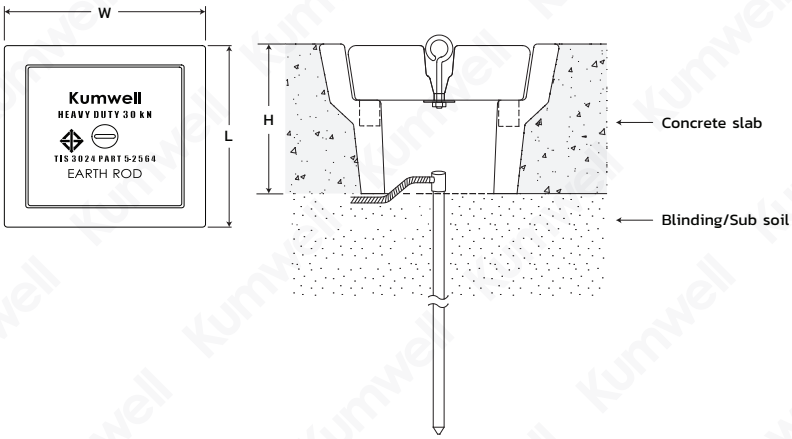

Cast Iron Lid



GXCIP-H

Code No.	Dimensions (mm) L	W	H	Weight (kg)
GXCIP-H	310	310	192	25.5

Material
Body - Concrete
Cover - Cast iron steel with epoxy grey color
Frame - Mild Steel

Tested Standard
IEC 62561 Part 5 - Heavy Duty Type
TIS 3024 Part 5 – Heavy Duty Type

Application
Inspection and testing point in grounding system.
Provide high compressive strength up to 60,000 N (6,000 kg).

Cover



Frame Support

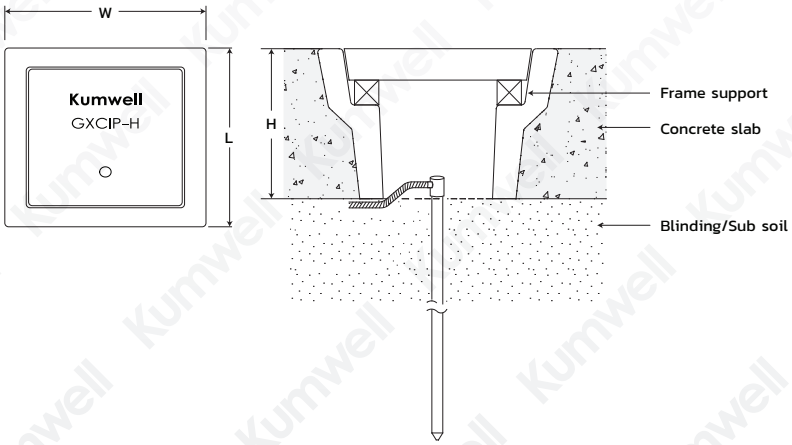

Note : Standard Color - Grey
Special Size and color cover can be requested.

Concrete Inspection Pit



Generally the large size of concrete pit are in heavy single piece (> 100 kg) and may need mobile crane for transportation and installation at-site. Hence we innovate the stackable pit which each part is easy to carry by man as well as still keep high compressive strength up to 60,000 N (6,000 kg).

Code No.	Dimensions (mm) W	D	H	Assembly Part	Total Weight (kg)
GXCIP-404050-4P	400	400	500	4	Approx. 62
GXCIP-505050-4P	500	500	500	4	Approx. 88

Material
Concrete

Tested Standard
IEC 62561 Part 5 - Heavy Duty Type
TIS 3024 Part 5 – Heavy Duty Type

Application
Inspection and testing point in grounding system.
Provide high compressive strength up to 60,000 N (6,000 kg).



Part / Code	GXCIP-404050-4P	GXCIP-505050-4P
Concrete Lid (A)	16 kg	22 kg
Upper Part (B)	18 kg	23 kg
Body 1 (C)	12 kg	23 kg
Body 2 (D)	16 kg	20 kg

Kumwell stackable pit provide special design for easy install and safety load weight for workers and saving for transportation cost.
Every parts A,B,C,D are below 23 kg easy to carry by a man and installation at- site.

Note : Special Size and color cover can be requested.

Unique Pit Design Easy Installation



Labor Saving



Time Saving

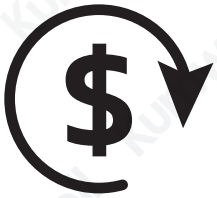

Cost Saving

Copper Earthing Electrode Water Sealing Glands



Code No.	Size (mm)	Ø Rod (in)	Weight (kg)
GXCIP-WS	300x300x2	5/8, 3/4	1.63
GXCIP-WS-R1	300x300x2	1	1.65

Material
Stainless Steel

Tested Standard
IEC 62561 Part 5
TIS 3024 Part 5

Application
Suitable for constructions where internal earth are specified

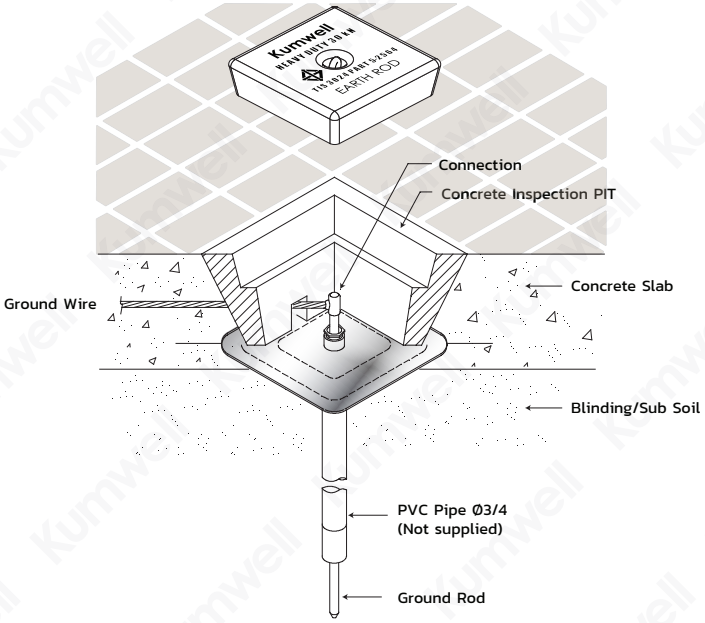

Ground Bar Pit

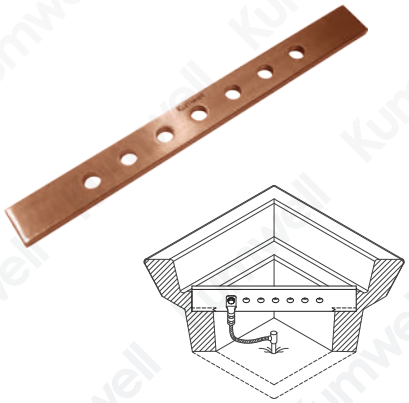

Code No.	No. of Terminal	Size (mm)	Weight (kg)
GXGBP 2505	5	250x25x6	0.30
GXGBP 2507	7	250x25x6	0.29
GXGBP 2505T	5	250x25x6	0.30
GXGBP 2507T	7	250x25x6	0.29

Material
Copper - BS EN 13601
Copper with Tin

Tested Standard
IEC 62561 Part 1
TIS 3024 Part 1

Application
Suitable for testing point of grounding system that separate connections with another inspection pit.

Heavy high-Grade Polypropylene Inspection Pit



Code No.	Dimensions (mm) L	W	H	Weight (kg)
GXFIP	306	306	215	2.40

Material
Heavy high-grade polypropylene

Tested Standard
IEC 62561 Part 5 - Heavy Duty Type
TIS 3024 Part 5 - Heavy Duty Type

Application
Suitable for inspection and testing point in grounding system. Provide high compressive strength up to 50,000 N (5,000 kg).

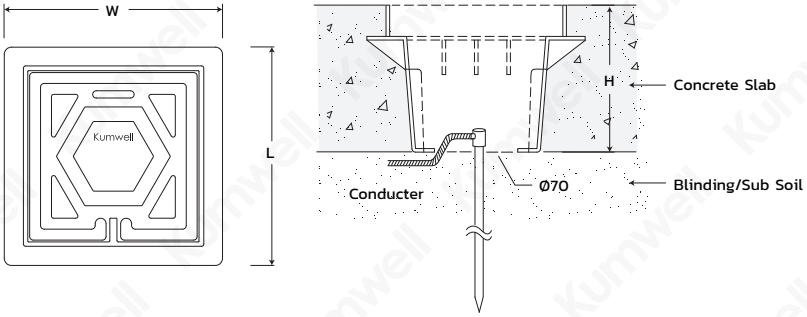

Ground Rod Seal



GXCIP-WP-XXX

GXCIP-WPD-XXX

Code No.	Ø Size (mm)	Ø Rod (in)	Length (mm)	Weight (kg)
GXCIP-WP-12.7	366	1/2	385	2.0
GXCIP-WP-14.2	366	5/8	385	2.0
GXCIP-WP-17.2	366	3/4	385	2.0
GXCIP-WPD-12.7	366	1/2	1,060	3.0
GXCIP-WPD-14.2	366	5/8	1,060	3.0
GXCIP-WPD-17.2	366	3/4	1,060	3.0

Material
Body - Plastic
Pipe - Plastic

Tested Standard
IEC 62561 Part 5
TIS 3024 Part 5

Application
A waterproof ground rod seal for use in constructions where internal ground are specified.

Note : Please specify ground rod diameter to be used with

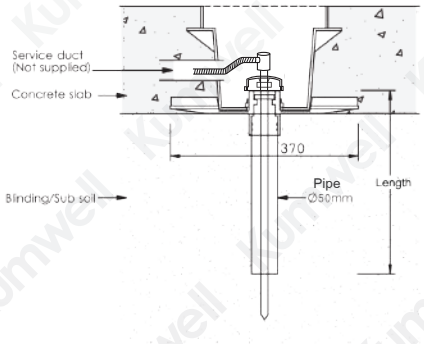

GXCIP-WP

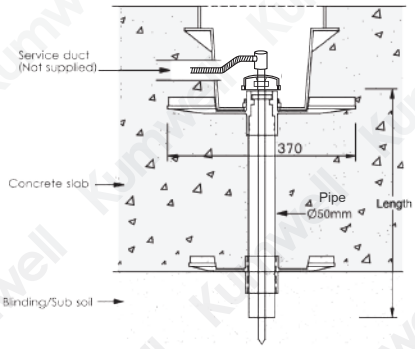

GXCIP-WPD

Static Earth Reels



Kumwell Static Earth Reels are used to ground equipment operating in hazardous area. When properly clamped to ground, the static earth reel dissipates static electrical buildup, reducing the chances of sparking and the potential for explosion.

Code No.	Cable Length (m)	Diameter (mm) L	W	H	Weight (kg)
GERA-15SL-N	15	222	85	225	5
GERA-30SL-N	30	235	95	250	7

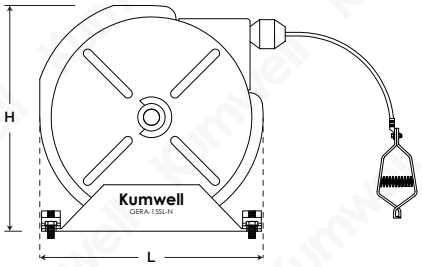

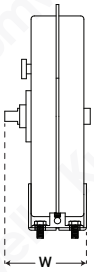

Material
Automatic Reels - Steel
Ground Clamp - Copper
Conductor - Sling 3/32" Steel aircraft cable
(Hi-Vis orange nylon covered cable)

Tested Standard
FM 6085, Grounding Clamps

Application
Discharge static electricity from airplane, gas station, petrochemical plant, etc.
in grounding system, reducing the chances of sparking and the potential for explosion.
Resistance is approximately 1 Ω per 15 m of steel cable.



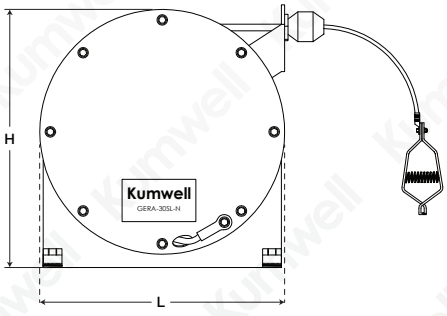

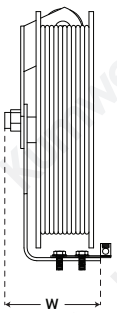

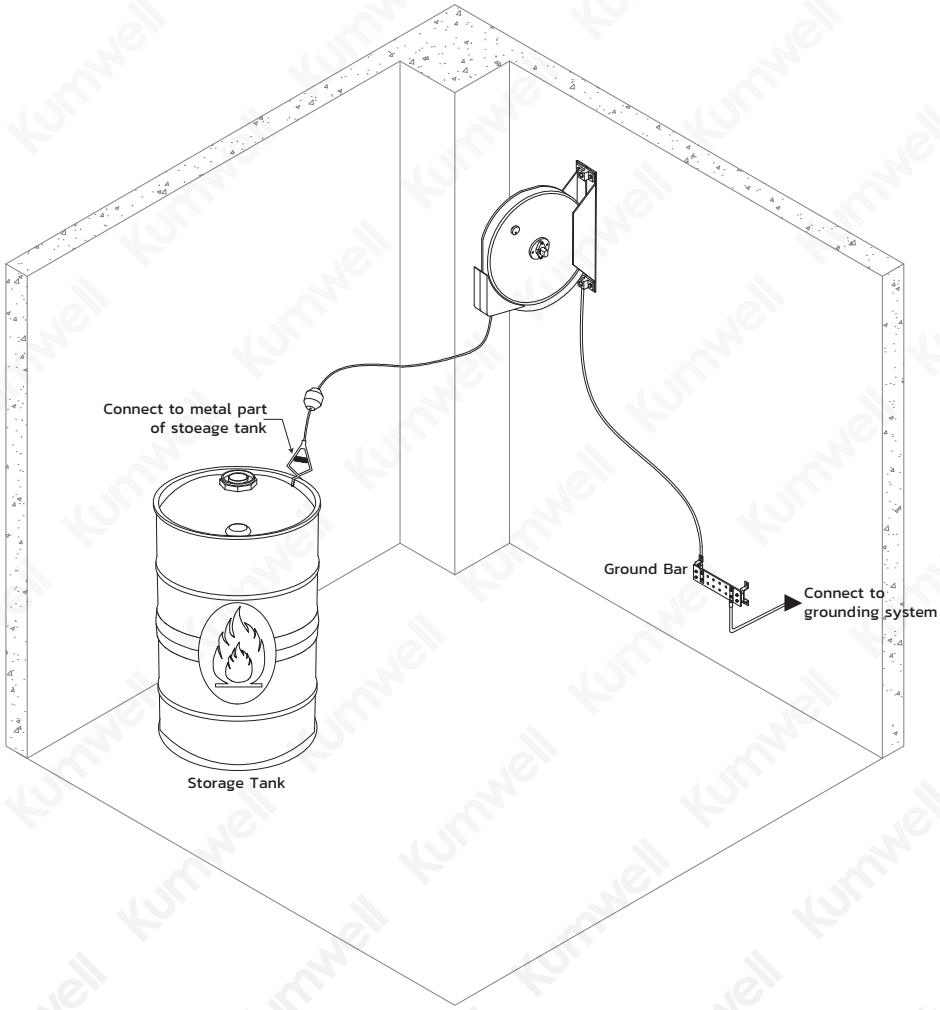

Static Earth Reels Monitor and Remote Interlock Controlled



Code No.	Cable Length (m)	Dimensions (mm) L	W	H	Weight (kg)
GERA 15ME	15	245	203	254	18.5

Material
Automatic Reels - Aluminium alloy body
Ground Clamp - Jaw Copper alloy / Brass sharp contacts 20 mm. opening
Conductor - 3x1.5 mm^2 to increase fraction resistance Steel aircraft cable

Application
Earth reel is an equipment for eliminating the electrostatic charges generates during the filling and emptying operations of tank-trucks which flammable and explosive products and to maintain them at electric zero potential.
- Explosion proof enclosure for static discharge.
- With remote monitor and control interface for fuel dispenser valve thru dry contact.

Tested Standard
ATEX: II 2G Exd IIA
Weatherproof: IP66
FM 6085, Grounding Clamps

Features
Supply voltage: 110 or 230 VAC + 10% (24 VDC/AC - on request)
Frequency: 50/60 Hz
Consumption: 12W
Working temperature: -10°C to +50°C
With light indicate: - Green light flashing when is safety operation
- Green light OFF indicating grounding system failure Explosin proof or ABS IP66 box control
Electric resistance control is not exceeded 5 Ohm
Contact voltage free (NO-NC-C) for interlock fuel operation

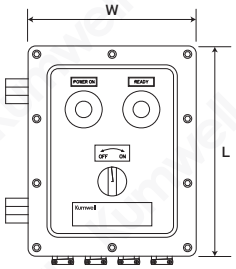

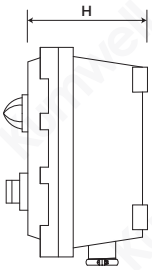

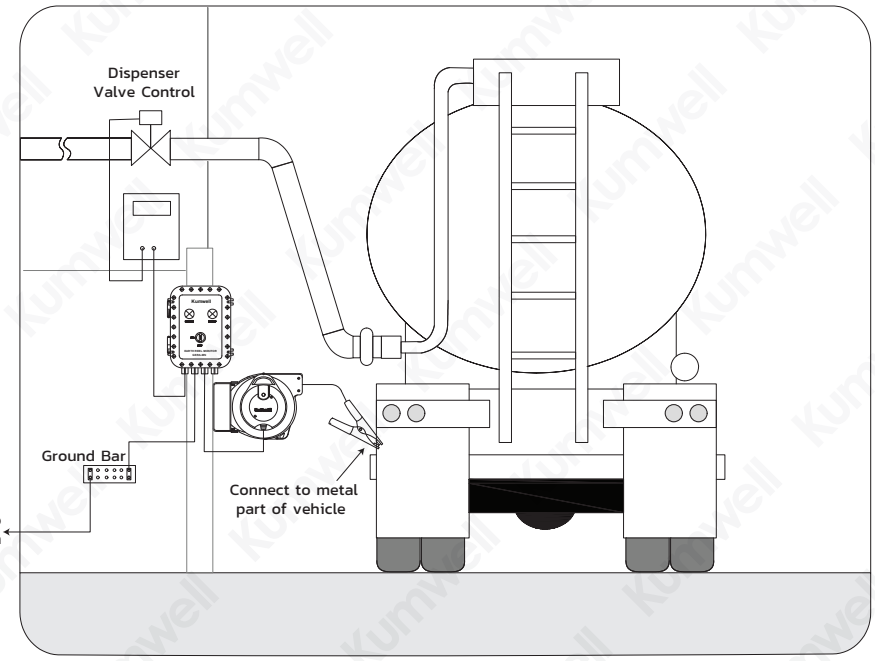

Blunt End Air Terminal

Copper

TIS 3024
Part 2-2563



Code No.	Rod Length (L) (mm)	Rod Diameter (Ø) (mm)	Thread (in)	Weight (kg)
LTAT 58-30	300	15	5/8	0.50
LTAT 58-50	500	15	5/8	0.80
LTAT 58-60	600	15	5/8	0.96
LTAT 58-100	1000	15	5/8	1.60
LTAT 34-30	300	19	3/4	0.75
LTAT 34-50	500	19	3/4	1.20
LTAT 34-60	600	19	3/4	1.51
LTAT 34-100	1000	19	3/4	2.50

Material
Copper - BS EN 13601

Tested Standard
IEC 62561 Part 2
TIS 3024 Part 2

Application
Suitable for typical installation

Certified Mark
TIS

Tin Plated Copper

TIS 3024
Part 2-2563



Code No.	Rod Length (L) (mm)	Rod Diameter (Ø) (mm)	Thread (in)	Weight (kg)
LTAT 58-30T	300	15	5/8	0.50
LTAT 58-50T	500	15	5/8	0.80
LTAT 58-60T	600	15	5/8	0.96
LTAT 58-100T	1000	15	5/8	1.60
LTAT 34-30T	300	19	3/4	0.75
LTAT 34-50T	500	19	3/4	1.20
LTAT 34-60T	600	19	3/4	1.51
LTAT 34-100T	1000	19	3/4	2.50

Material
Tin plated copper - BS EN 13601

Tested Standard
IEC 62561 Part 2
TIS 3024 Part 2

Application
Suitable for extra high corrosive area

Certified Mark
TIS

Aluminium

TIS 3024
Part 2-2563



Code No.	Rod Length (L) (mm)	Rod Diameter (Ø) (mm)	Thread (in)	Weight (kg)
LTAT 58-30A	300	16	5/8	0.16
LTAT 58-50A	500	16	5/8	0.27
LTAT 58-60A	600	16	5/8	0.33
LTAT 58-100A	1000	16	5/8	0.55
LTAT 34-30A	300	19	3/4	0.25
LTAT 34-50A	500	19	3/4	0.41
LTAT 34-60A	600	19	3/4	0.49
LTAT 34-100A	1000	19	3/4	0.82

Material
Aluminium - BS 2898

Tested Standard
IEC 62561 Part 2
TIS 3024 Part 2

Application
Suitable for installation on metal roof

Certified Mark
TIS

Blunt End Air Terminal (Height ≥1.5 m.)

Copper with Guy Wire Support

TIS 3024
Part 2-2563



Code No.	Rod Length (L) (mm)	Rod Diameter (Ø) (mm)	Thread (in)	Weight (kg)
LTATG 58-150	1500	15	5/8	3.01
LTATG 58-200	2000	15	5/8	3.90
LTATG 34-150	1500	19	3/4	4.19
LTATG 34-200	2000	19	3/4	5.47

Material
Copper - BS EN 13601

Tested Standard
IEC 62561 Part 2
TIS 3024 Part 2

Application
Suitable for typical installation

Certified Mark
TIS (For LTATG 34-XXX)

Tin Plated Copper with Guy Wire Support

TIS 3024
Part 2-2563



Code No.	Rod Length (L) (mm)	Rod Diameter (Ø) (mm)	Thread (in)	Weight (kg)
LTATG 58-150T	1500	15	5/8	3.01
LTATG 58-200T	2000	15	5/8	3.90
LTATG 34-150T	1500	19	3/4	4.19
LTATG 34-200T	2000	19	3/4	5.47

Material
Tin plated copper - BS EN 13601

Tested Standard
IEC 62561 Part 2
TIS 3024 Part 2

Application
Suitable for extra high corrosive area

Certified Mark
TIS (For LTATG 34-XXX)

Aluminium with Guy Wire Support

TIS 3024
Part 2-2563

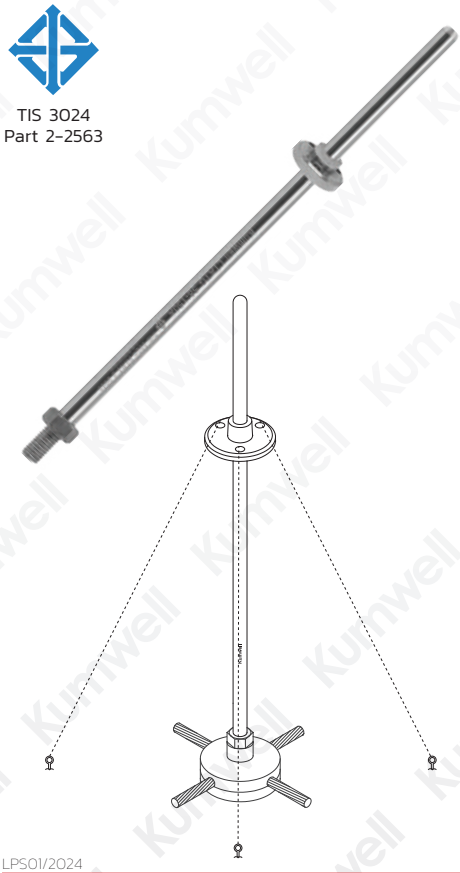

Code No.	Rod Length (L) (mm)	Rod Diameter (Ø) (mm)	Thread (in)	Weight (kg)
LTATG 58-150A	1500	16	5/8	0.91
LTATG 58-200A	2000	16	5/8	1.18
LTATG 34-150A	1500	19	3/4	1.19
LTATG 34-200A	2000	19	3/4	1.58

Material
Aluminium - BS 2898

Tested Standard
IEC 62561 Part 2
TIS 3024 Part 2

Application
Suitable for installation on metal roof

Certified Mark
TIS (For LTATG 34-XXXA)

Note : Guy wire is not included.

Multi Point Air Terminals



Code No.	Diameter (Ø) (in)	Material	Weight (kg)
LMAT 58	5/8	Copper	0.36
LMAT 34	3/4	Copper	0.36

Material
Copper BS EN 13601

Tested Standard
IEC 62561 Part 2
TIS 3024 Part 2

Application
Assembly with taper pointed copper air rods and multi point air terminal for typical installation.



Code No.	Rod Length (Ø) (mm)	Rod Diameter (Ø) (mm)	Threaded (in)	Weight (kg)
LTAT 16-30	300	15	5/8	0.50
LTAT 16-50	500	15	5/8	0.80
LTAT 16-60	600	15	5/8	0.96
LTAT 16-100	1000	15	5/8	1.60
LTAT 20-30	300	19	3/4	0.75
LTAT 20-50	500	19	3/4	1.27
LTAT 20-60	600	19	3/4	1.51
LTAT 20-100	1000	19	3/4	2.50

Material
Copper BS EN 13601

Tested Standard
IEC 62561 Part 2
TIS 3024 Part 2

Application
Assembly with taper pointed copper air rods and multi point air terminal for typical installation.

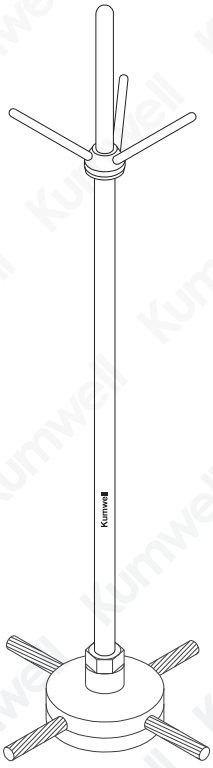

Note : Special size can be request.

Air Terminals Tip



Code No.	For Air Terminal Diameter (in)	Threaded (in)	Weight (kg)
LMBT 58	5/8	5/8	0.27
LMBT 34	3/4	3/4	0.29
LMBT 58T	5/8	5/8	0.27
LMBT 34T	3/4	3/4	0.29

Material
Copper bonded Steel
Copper bonded Steel With Tin Plated

Tested Standard
IEC 62561 Part 2
TIS 3024 Part 2

Application
Assembly with elevation air terminal and air terminal tip for typical installation.

Elevation Air Terminal for Air Terminal Tip

Copper

TIS 3024
Part 2-2563



Code No.	Rod Length (L) (mm)	Rod Diameter (Ø) (mm)	Threaded (in)	Weight (kg)
LELT 58 - 30	300	15	5/8	0.50
LELT 58 - 50	500	15	5/8	0.80
LELT 58 - 60	600	15	5/8	0.96
LELT 58 - 100	1000	15	5/8	1.60
LELTG 58 - 150	1500	15	5/8	2.36
LELTG 58 - 200	2000	15	5/8	3.16
LELT 34 - 30	300	19	3/4	0.75
LELT 34 - 50	500	19	3/4	1.20
LELT 34 - 60	600	19	3/4	1.51
LELT 34 - 100	1000	19	3/4	2.50
LELTG 34 - 150	1500	19	3/4	3.82
LELTG 34 - 200	2000	19	3/4	5.09

Material
Copper - BS EN 13601

Tested Standard
IEC 62561 Part 2
TIS 3024 Part 2

Application
Assembly with elevation air terminal and air terminal tip for typical installation.

Certified Mark
TIS

Tin Plated Copper

TIS 3024
Part 2-2563



Code No.	Rod Length (L) (mm)	Rod Diameter (Ø) (mm)	Threaded (in)	Weight (kg)
LELT 58 - 30T	300	15	5/8	0.50
LELT 58 - 50T	500	15	5/8	0.80
LELT 58 - 60T	600	15	5/8	0.96
LELT 58 - 100T	1000	15	5/8	1.60
LELTG 58 - 150T	1500	15	5/8	2.36
LELTG 58 - 200T	2000	15	5/8	3.16
LELT 34 - 30T	300	19	3/4	0.75
LELT 34 - 50T	500	19	3/4	1.20
LELT 34 - 60T	600	19	3/4	1.51
LELT 34 - 100T	1000	19	3/4	2.50
LELTG 34 - 150T	1500	19	3/4	3.82
LELTG 34 - 200T	2000	19	3/4	5.09

Material
Tin plated copper - BS EN 13601

Tested Standard
IEC 62561 Part 2
TIS 3024 Part 2

Application
Assembly with elevation air terminal and air terminal tip for extra high corrosive area.

Certified Mark
TIS

Strike Pad



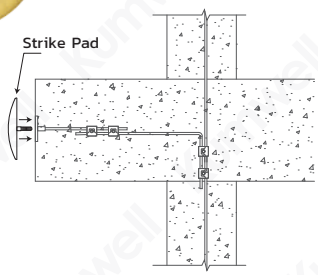

Code No.	Diameter (Ø) (mm)	Stud Size (in)	Material	Weight (kg)
LGSP-M10C-40	112	M10	Copper Alloy	0.38
LGSP-M10A-40	112	M10	Aluminium Alloy	0.11

Material
Copper Alloy - BS EN 1982, Bolt - Stainless Steel

Tested Standard
IEC 62561 Part 1
TIS 3024 Part 1

Application
Suitable for side flash protection of building

Air Terminal Bracket





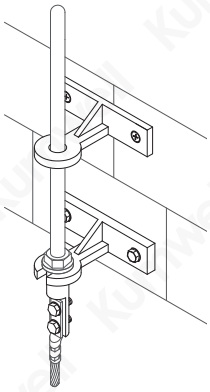



Code No.	Rod Diameter (Ø) (mm)	Material	Weight (kg)
LGABT-C	15, 19	Copper Alloy	0.85
LGABB-C	15, 19	Copper Alloy	0.90
LPAF-C-BS / LPAF-C	15, 19	Copper Alloy	0.25
LGABT-CT	15, 19	Copper Alloy with Tin Plated	0.85
LGABB-CT	15, 19	Copper Alloy with Tin Plated	0.90
LPAF-CT	15, 19	Copper Alloy with Tin Plated	0.25
LGABT-A	15, 19	Aluminium Alloy	0.26
LGABB-A	15, 19	Aluminium Alloy	0.27
LPAF-A	15, 19	Aluminium Alloy	0.12

Material
Copper Alloy - BS EN 1982,
Bolt - Stainless Steel or Copper Alloy
Aluminium Alloy - BS 2898, Bolt - Stainless Steel

Tested Standard
IEC 62561 Part 1, TIS 3024 Part 1
(LPAF-X)

Application
Support air terminal by fastening on wall

Puddle Flange

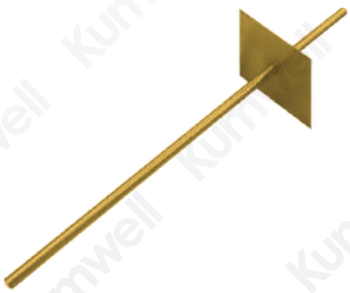

Code No.	Rod Diameter (Ø) (mm)	Material	Weight (kg)
GPF-58	5/8	Copper	1.4
GPF-34	3/4	Copper	1.9

Material
Copper - BS EN 13601

Tested Standard
IEC 62561 Part 2
TIS 3024 Part 2

Application
Interconnecting conductors to the other level.

Universal Saddle



LCRT-XX-XX-XXX-BS



LCRT-XX-XX-XXX

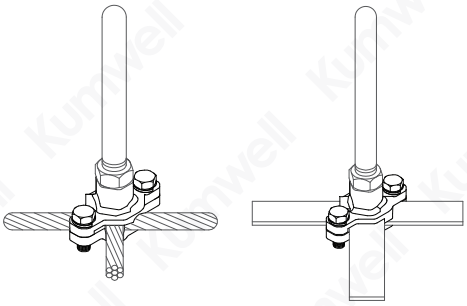

Code No.		Thread Size (in)	Tape Size (mm)	Cable Size (mm^2)	Material	Weight (kg)
LCRT-58-70-254-BS	LCRT-58-70-254	5/8	25x3-25x3, 25x4-25x4	50-50, 70-70	Copper Alloy	0.74
LCRT-34-70-254-BS	LCRT-34-70-254	3/4	25x3-25x3, 25x4-25x4	50-50, 70-70	Copper Alloy	0.74
LCRT-58-70-254A		5/8	25x3-25x3, 25x4-25x4	50-50, 70-70	Aluminium Alloy	0.22
LCRT-34-70-254A		3/4	25x3-25x3, 25x4-25x4	50-50, 70-70	Aluminium Alloy	0.21

Material
Copper Alloy - BS EN 1982,
Bolt - Stainless Steel or Copper Alloy

Tested Standard
IEC 62561 Part 1
TIS 3024 Part 1

Application
Support air terminal to connect with copper stranded, solid conductors or tape conductors. Not intended for use with air terminals length more than 600 mm.

Round Saddle



LROS XX-BS



LROS XX

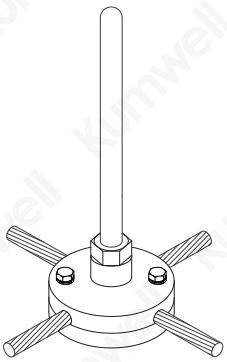

Code No.		Thread Size (in)	Cable Size (mm^2)	Material	Weight (kg)
LROS 58-BS	LROS 58	5/8	50-70	Copper Alloy	0.60
LROS 34-BS	LROS 34	3/4	50-70	Copper Alloy	0.60
LROS 58-C120-BS	LROS 58-C120	5/8	95-120	Copper Alloy	0.74
LROS 34-C120-BS	LROS 34-C120	3/4	95-120	Copper Alloy	0.74
LROS 58A		5/8	50-70	Aluminium Alloy	0.22
LROS 34A		3/4	50-70	Aluminium Alloy	0.21

Material
Aluminium Alloy - BS EN 2898
Bolt - Stainless Steel or Copper Alloy

Tested Standard
IEC 62561 Part 1
TIS 3024 Part 1

Application
Support air terminal to connect with copper stranded or solid conductors.

Tape Saddle



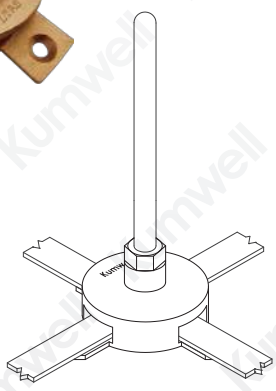

Code No.	Thread Size (in)	Tape Size (mm)	Material	Weight (kg)
LTAS 58	5/8	25x3 , 25x4	Copper Alloy	0.460
LTAS 34	3/4	25x3 , 25x4	Copper Alloy	0.440
LTAS 58T	5/8	25x3 , 25x4	Copper Alloy with Tin Plated	0.460
LTAS 34T	3/4	25x3 , 25x4	Copper Alloy with Tin Plated	0.440
LTAS 58A	5/8	25x3 , 25x4	Aluminium Alloy	0.134
LTAS 34A	3/4	25x3 , 25x4	Aluminium Alloy	0.132

Material
Copper Alloy - BS EN 1982
Aluminium Alloy - BS 2898

Tested Standard
IEC 62561 Part 1
TIS 3024 Part 1

Application
Support air terminal to connect with copper or aluminium tape conductors.

Flat Saddle



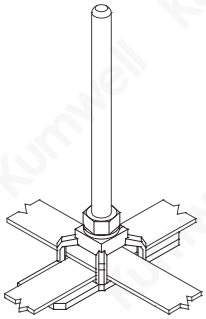

Code No.	Thread Size (in)	Maximum Conductor Width (mm)	Material	Weight (kg)
LFLS 58	5/8	31	Copper Alloy	0.49
LFLS 34	3/4	31	Copper Alloy	0.48
LFLS 58A	5/8	31	Aluminium Alloy	0.15
LFLS 34A	3/4	31	Aluminium Alloy	0.15

Material
Copper Alloy - BS EN 1982
Aluminium Alloy - BS 2898

Tested Standard
IEC 62561 Part 1
TIS 3024 Part 1

Application
Support air terminal to connect with copper tape conductors.

Double Base Saddle



LDOS XX-BS
LDOS XX-CXXX-BS



LDOS XX
LDOS XX-CXXX

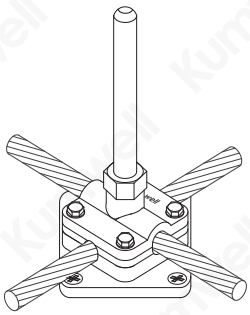

Code No.		Thread Size (in)	Cable Size (mm²)	Material	Weight (kg)
LDOS 58-BS	LDOS 58	5/8	50-70	Copper Alloy	0.66
LDOS 34-BS	LDOS 34	3/4	50-70	Copper Alloy	0.66
LDOS 58-C120-BS	LDOS 58-C120	5/8	95-120	Copper Alloy	0.69
LDOS 34-C120-BS	LDOS 34-C120	3/4	95-120	Copper Alloy	0.69
LDOS 58A		5/8	50-70	Aluminium Alloy	0.20
LDOS 34A		3/4	50-70	Aluminium Alloy	0.19

Material
Copper Alloy - BS EN 1982,
Bolt - Stainless Steel or Copper Alloy
Aluminium Alloy - BS 2898, Bolt - Stainless Steel

Tested Standard
IEC 62561 Part 1
TIS 3024 Part 1

Application
Support air terminal to connect with copper stranded or solid conductors.

Cross Cable Saddle



LCRS XX-BS



LCRS XX

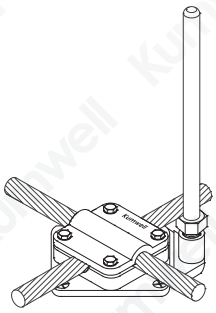

Code No.		Thread Size (in)	Cable Size (mm²)	Material	Weight (kg)
LCRS 58-BS	LCRS 58	5/8	35-70	Copper Alloy	0.95
LCRS 34-BS	LCRS 34	3/4	35-70	Copper Alloy	0.95

Material
Copper Alloy - BS EN 1982
Bolt - Stainless Steel or Copper Alloy

Tested Standard
IEC 62561 Part 1
TIS 3024 Part 1

Application
Support air terminal to connect with copper stranded or solid conductors.

Adjustable Saddle



LDAS XX-BS
LDAS XX-CXXX-BS

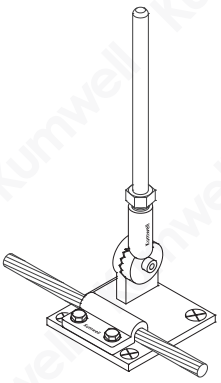



LDAS XX
LDAS XX-CXXX

For Cable

Code No.		Thread Size (in)	Cable Size (mm²)	Material	Weight (kg)
LDAS 58-BS	LDAS 58	5/8	50-70	Copper Alloy	0.72
LDAS 34-BS	LDAS 34	3/4	50-70	Copper Alloy	0.72
LDAS 58-C120-BS	LDAS 58-C120	5/8	95-120	Copper Alloy	0.73
LDAS 34-C120-BS	LDAS 34-C120	3/4	95-120	Copper Alloy	0.73
LDAS 58T		5/8	50-70	Copper Alloy with Tin Plated	0.72
LDAS 34T		3/4	50-70	Copper Alloy with Tin Plated	0.72
LDAS 58A		5/8	50-70	Aluminium Alloy	0.25
LDAS 34A		3/4	50-70	Aluminium Alloy	0.25

Material
Copper Alloy - BS EN 1982,
Bolt - Stainless Steel or Copper Alloy
Copper Alloy with Tin Plated, Bolt - Stainless Steel
Aluminium Alloy - BS 2898

Tested Standard
IEC 62561 Part 1
TIS 3024 Part 1

Application
Support air terminal onto adjustable angle to connect with copper stranded.



LDAS XX-XX-BS

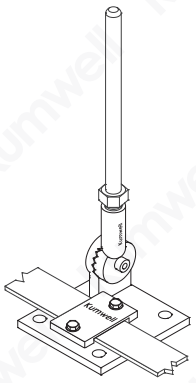



LDAS XX-XXX

For Tape

Code No.		Thread Size (in)	Tape Size (mm)	Material	Weight (kg)
LDAS 58-252-BS	LDAS 58-252	5/8	25x2	Copper Alloy	0.81
LDAS 58-253-BS	LDAS 58-253	5/8	25x3	Copper Alloy	0.81
LDAS 34-253-BS	LDAS 34-253	3/4	25x3	Copper Alloy	0.81
LDAS 58-254-BS	LDAS 58-254	5/8	25x4	Copper Alloy	0.81
LDAS 34-254-BS	LDAS 34-254	3/4	25x4	Copper Alloy	0.81
LDAS 58-253T		5/8	25x3	Copper Alloy with Tin Plated	0.81
LDAS 34-253T		3/4	25x3	Copper Alloy with Tin Plated	0.81
LDAS 58-253A		5/8	25x3	Aluminium Alloy	0.25
LDAS 34-253A		3/4	25x3	Aluminium Alloy	0.25
LDAS 58-254A		5/8	25x4	Aluminium Alloy	0.25
LDAS 34-254A		3/4	25x4	Aluminium Alloy	0.25

Material
Copper Alloy - BS EN 1982,
Bolt - Stainless Steel or Copper Alloy
Copper Alloy with Tin Plated, Bolt - Stainless Steel
Aluminium Alloy - BS 2898

Tested Standard
IEC 62561 Part 1
TIS 3024 Part 1

Application
Support air terminal onto adjustable angle to connect with copper or aluminium tape conductors.

Floor Saddle



LFRS XX-BS
LFRS XX-CXX-BS



LFRS XX
LFRS XX-CXX

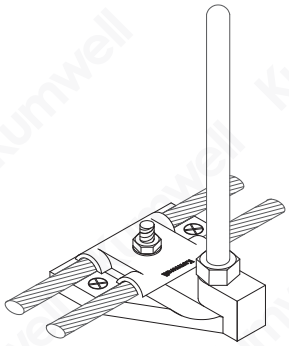

Code No.		Thread Size (in)	Cable Size (mm²)	Material	Weight (kg)
LFRS 58-BS	LFRS 58	5/8	50-70	Copper Alloy	0.58
LFRS 34-BS	LFRS 34	3/4	50-70	Copper Alloy	0.58
LFRS 58-C95-BS	LFRS 58-C95	5/8	95	Copper Alloy	0.54
LFRS 34-C95-BS	LFRS 34-C95	3/4	95	Copper Alloy	0.54
LFRS 58A		5/8	50-70	Aluminium Alloy	0.23
LFRS 34A		3/4	50-70	Aluminium Alloy	0.23

Material
Copper Alloy - BS EN 1982,
Bolt Nut - Stainless Steel or Copper Alloy
Aluminium Alloy - BS 2898, Bolt Nut - Stainless Steel

Tested Standard
IEC 62561 Part 1
TIS 3024 Part 1

Application
Support air terminal to connect with copper stranded or solid conductors.

Wall Saddle



LWAS XX-BS
LWAS XX-CXX-BS



LWAS XX
LWAS XX-CXX

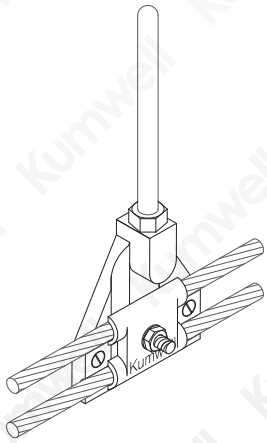

Code No.		Thread Size (in)	Cable Size (mm²)	Material	Weight (kg)
LWAS 58-BS	LWAS 58	5/8	50-70	Copper Alloy	0.58
LWAS 34-BS	LWAS 34	3/4	50-70	Copper Alloy	0.58
LWAS 58-C95-BS	LWAS 58-C95	5/8	95	Copper Alloy	0.54
LWAS 34-C95-BS	LWAS 34-C95	3/4	95	Copper Alloy	0.54
LWAS 58A		5/8	50-70	Aluminium Alloy	0.23
LWAS 34A		3/4	50-70	Aluminium Alloy	0.23

Material
Copper Alloy - BS EN 1982,
Bolt Nut - Stainless Steel or Copper Alloy
Aluminium Alloy - BS 2898, Bolt Nut - Stainless Steel

Tested Standard
IEC 62561 Part 1
TIS 3024 Part 1

Application
Support air terminal to connect with copper stranded or solid conductors.

Cable Support

TIS 3024
Part 2-2563



LCAS XXX-XXX-BS



LCAS XXX-XXX

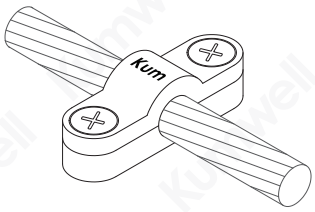

Code No.		Cable Size (mm²)	Material	Weight (kg)
LCAS 25-35-BS	LCAS 25-35	25-35	Copper Alloy	0.06
LCAS 50-70-BS	LCAS 50-70	50-70	Copper Alloy	0.06
LCAS 95-120-BS	LCAS 95-120	95-120	Copper Alloy	0.08
LCAS 150-185-BS	LCAS 150-185	150-185	Copper Alloy	0.10
LCAS 240-300-BS	LCAS 240-300	240-300	Copper Alloy	0.17
LCAS 25-35T		25-35	Copper Alloy with Tin Plated	0.06
LCAS 50-70T		50-70	Copper Alloy with Tin Plated	0.06
LCAS 95-120T		95-120	Copper Alloy with Tin Plated	0.08
LCAS 25-35A		25-35	Aluminium Alloy	0.02
LCAS 50-70A		50-70	Aluminium Alloy	0.02
LCAS 95-120A		95-120	Aluminium Alloy	0.03
LCASD-8-10A		Aluminium Ø 8-10 mm	Aluminium Alloy	0.03

Material
Copper Alloy - BS EN 1982,
Bolt - Stainless Steel or Copper Alloy
Copper Alloy with Tin Plated, Bolt - Stainless Steel
Aluminium Alloy - BS 2898, Bolt - Stainless Steel

Tested Standard
IEC 62561 Part 4
TIS 3024 Part 4

Application
Fix copper stranded or solid conductors.

Certified Mark
TIS

Cable Cross Clamp



LCAC XX-XXX-BS



LCAC XX-XXX

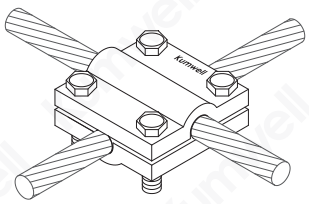

Code No.		Cable Size (mm²)	Material	Weight (kg)
LCAC 35-70-BS	LCAC 35-70	35-70	Copper Alloy	0.32
LCAC 95-120-BS	LCAC 95-120	95-120	Copper Alloy	0.34
LCAC 150-240-BS	LCAC 150-240	150-240	Copper Alloy	0.62
LCAC 35-70A		35-70	Aluminium Alloy	0.10
LCAC 95-120A		95-120	Aluminium Alloy	0.16

Material
Copper Alloy - BS EN 1982,
Bolt - Stainless Steel or Copper Alloy
Aluminium Alloy - BS 2898, Bolt - Stainless Steel

Tested Standard
IEC 62561 Part 1
TIS 3024 Part 1

Application
Connect copper stranded or solid conductors.

Tee Clamp



LTEC-Y-BS



LTEC-Y

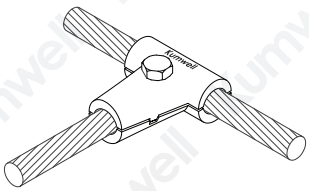

Code No.		Cable Size (mm²)	Material	Weight (kg)
LTEC-A-BS	LTEC-A	50-70	Copper Alloy	0.151
LTEC-B-BS	LTEC-B	95-120	Copper Alloy	0.286
LTEC-AT		50-70	Copper Alloy with Tin Plated	0.151
LTEC-BT		95-120	Copper Alloy with Tin Plated	0.286

Material
Copper Alloy - BS EN 1982,
Bolt - Stainless Steel or Copper Alloy
Copper Alloy with Tin Plated, Bolt - Stainless Steel

Tested Standard
IEC 62561 Part 1
TIS 3024 Part 1

Application
Connect copper stranded or solid conductors.

Cable to Tape



LCTT XXX-XXX-BS



LCTT XXX-XXX

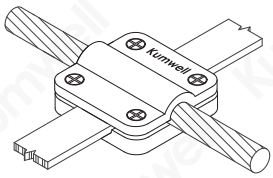

Code No.		Cable Size (mm²)	Tape Size (mm)	Material	Weight (kg)
LCTT 120-253-BS	LCTT 120-253	95-120	25x3	Copper Alloy	0.266
LCTT 120-254-BS	LCTT 120-254	95-120	25x4	Copper Alloy	0.292
LCTT 70-256-BS	LCTT 70-256	35-70	25x6	Copper Alloy	0.303
LCTT 120-256-BS	LCTT 120-256	95-120	25x6	Copper Alloy	0.319

Material
Copper Alloy - BS EN 1982,
Bolt - Stainless Steel or Copper Alloy
Aluminium Alloy - BS 2898, (A)

Tested Standard
IEC 62561 Part 1
TIS 3024 Part 1

Application
Connect copper tape conductors with copper stranded or solid conductors.

One Hole Cable Grip

TIS 3024
Part 4-2563



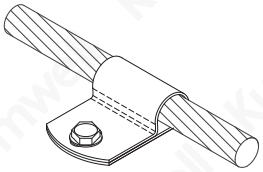

Code No.	Cable Size (mm²)	Material	Weight (kg)
LOCG 25-35	25-35	Copper	0.011
LOCG 50-70	50-70	Copper	0.014
LOCG 95-120	95-120	Copper	0.025
LOCG 150-185	150-185	Copper	0.030
LOCG 240-300	240-300	Copper	0.090

Material
Copper - BS EN 13601

Tested Standard
IEC 62561 Part 4
TIS 3024 Part 4

Application
Fix copper stranded or solid conductors.

Certified Mark
TIS

Tape Clip



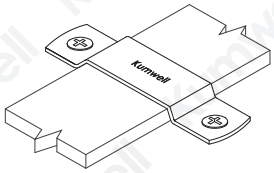

Code No.	Tape Size (mm)	Weight (kg)
LPTC-203	20x3	0.0125
LPTC-253	25x3	0.0134
LPTC-254	25x4	0.0136
LPTC-256	25x6	0.0140
LPTC-303	30x3	0.0143
LPTC-304	30x4	0.0152
LPTC-306	30x6	0.0156
LPTC-506	50x6	0.0363

Material
Copper - BS EN 13601

Tested Standard
IEC 62561 Part 4
TIS 3024 Part 4

Application
Fix copper tape conductor on flat surface.

Tape Support

TIS 3024
Part 4-2563



LTAS-XXX-BS



LTAS-XXX

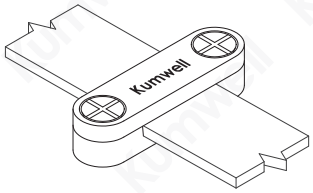

Code No.		Tape Size (mm)	Material	Weight (kg)
LTAS-253-BS	LTAS-253	25x3	Copper Alloy	0.067
LTAS-254-BS	LTAS-254	25x4	Copper Alloy	0.071
LTAS-256-BS	LTAS-256	25x6	Copper Alloy	0.076
LTAS-304-BS	LTAS-304	30x4	Copper Alloy	0.087
LTAS-305-BS	LTAS-305	30x5	Copper Alloy	0.090
LTAS-324-BS	LTAS-324	32x4	Copper Alloy	0.094
LTAS-325-BS	LTAS-325	32x5	Copper Alloy	0.098
LTAS-326-BS	LTAS-326	32x6	Copper Alloy	0.101
LTAS-403-BS	LTAS-403	40x3	Copper Alloy	0.112
LTAS-404-BS	LTAS-404	40x4	Copper Alloy	0.116
LTAS-405-BS	LTAS-405	40x5	Copper Alloy	0.121
LTAS-503-BS	LTAS-503	50x3	Copper Alloy	0.117
LTAS-506-BS	LTAS-506	50x6	Copper Alloy	0.127
LTAS-253T		25x3	Copper Alloy with Tin Plated	0.067
LTAS-254T		25x4	Copper Alloy with Tin Plated	0.071
LTAS-256T		25x6	Copper Alloy with Tin Plated	0.076
LTAS-253A		25x3	Aluminium Alloy	0.021
LTAS-254A		25x4	Aluminium Alloy	0.027
LTAS-256A		25x6	Aluminium Alloy	0.029

Material
Copper Alloy - BS EN 1982,
Bolt - Stainless Steel or Copper Alloy
Copper Alloy with Tin Plated, Bolt - Stainless Steel
Aluminium Alloy - BS 2898, (A) Bolt - Stainless Steel

Tested Standard
IEC 62561 Part 4
TIS 3024 Part 4

Application
Fix copper or aluminium tape conductors

Certified Mark
TIS

Square Tape Support



LSQS-XXX-BS LSQS-XXX

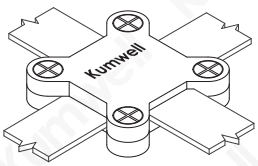

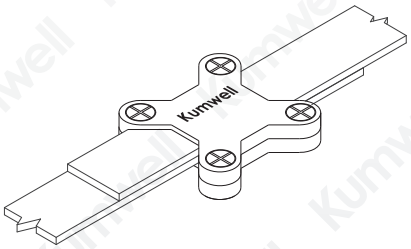

Code No.		Tape Size (mm)	Material	Weight (kg)
LSQS-253-BS	LSQS-253	25x3	Copper Alloy	0.150
LSQS-254-BS	LSQS-254	25x4	Copper Alloy	0.172
LSQS-256-BS	LSQS-256	25x6	Copper Alloy	0.216
LSQS-304-BS	LSQS-304	30x4	Copper Alloy	0.261
LSQS-305-BS	LSQS-305	30x5	Copper Alloy	0.295
LSQS-324-BS	LSQS-324	32x4	Copper Alloy	0.245
LSQS-325-BS	LSQS-325	32x5	Copper Alloy	0.276
LSQS-403-BS	LSQS-403	40x3	Copper Alloy	0.341
LSQS-404-BS	LSQS-404	40x4	Copper Alloy	0.381
LSQS-405-BS	LSQS-405	40x5	Copper Alloy	0.423
LSQS-503-BS	LSQS-503	50x3	Copper Alloy	0.412
LSQS-506-BS	LSQS-506	50x6	Copper Alloy	0.561
LSQS-253T		25x3	Copper Alloy with Tin Plated	0.150
LSQS-254T		25x4	Copper Alloy with Tin Plated	0.172
LSQS-256T		25x6	Copper Alloy with Tin Plated	0.216
LSQS-253A		25x3	Aluminium Alloy	0.045
LSQS-254A		25x4	Aluminium Alloy	0.052
LSQS-256A		25x6	Aluminium Alloy	0.065

Material
Copper Alloy - BS EN 1982,
Bolt - Stainless Steel or Copper Alloy
Copper Alloy with Tin Plated, Bolt - Stainless Steel
Aluminium Alloy - BS 2898, (A) Bolt - Stainless Steel

Tested Standard
IEC 62561 Part 1
TIS 3024 Part 1

Application
Connect copper or aluminium tape conductors.

Bi-Metallic Connector



LBMC

Connector

Code No.	Connection Length (mm)	Material	Weight (kg)
LBMC	80	Copper / Aluminium	0.18

Material
Copper Alloy - BS EN 1982
Aluminium - BS 2898

Tested Standard
IEC 62561 Part 1
TIS 3024 Part 1

Application
Connect copper and aluminium conductors by non-corrosive contact which is made by fusion method.



LBMW

Washer

Code No.	Dimension (mm)	Hole Size (mm)	Weight (kg)
LBMW-6	30x2	7	0.004
LBMW-8	30x2	9	0.004
LBMW-10	30x2	11	0.004
LBMW-12	30x2	14	0.004
LBMW-16	30x2	18	0.004

Material
Copper Alloy - BS EN 1982
Aluminium - BS 2898

Application
Connect copper and aluminium conductors by non-corrosive contact which is made by fusion method.

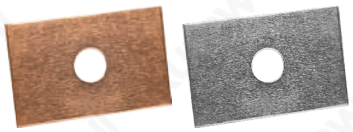

LBMP

Plate

Code No.	Dimension (mm)	Hole Size (mm)	Weight (kg)
LBMP-6	55x36x2	7	0.006
LBMP-8	55x36x2	9	0.006
LBMP-10	55x36x2	11	0.006
LBMP-12	55x36x2	14	0.006
LBMP-16	55x36x2	18	0.006

Material
Copper Alloy - BS EN 1982
Aluminium - BS 2898

Application
Connect copper and aluminium conductors by non-corrosive contact which is made by fusion method.

Back Plate Holdfast

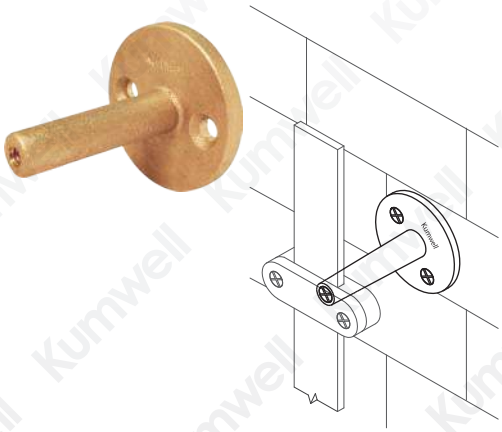

Code No.	Diameter (Ø) (mm)	Material	Weight (kg)
LXPH-C	63	Copper Alloy	0.26
LXPH-A	63	Aluminium Alloy	0.08

Copper Alloy - BS EN 1982
Aluminium - BS 2898

Tested Standard
IEC 62561 Part 4
TIS 3024 Part 4

Application
Place copper stranded, solid or tape conductors onto flat surface.

Back Holdfast



LXGBH-XX-BS



LXGBH-XX

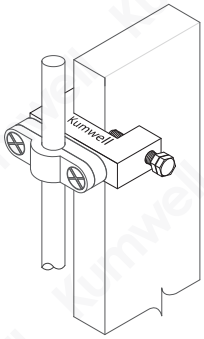

Code No.		Steel Plate Thickness (mm)	Material	Weight (kg)
LXGBH-12-BS	LXGBH-12	1-13	Copper Alloy	0.083
LXGBH-12A		1-13	Aluminium Alloy	0.032

Material
Copper Alloy - BS EN 1982,
Bolt - Stainless Steel or Copper Alloy
Aluminium Alloy - BS 2898, Bolt - Stainless Steel

Tested Standard
IEC 62561 Part 4
TIS 3024 Part 4

Application
Support conductor onto angle Steel.

Conductor to Rebar Clamp



LRBC XX-XX-BS



LRBC XX-XX

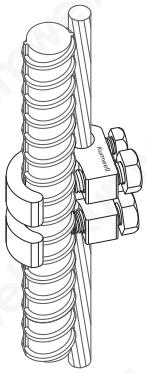

Code No.		Cable Size (mm²)	Rebar Size (mm)	Weight (kg)
LRBC 18-70-BS	LRBC 18-70	10-70	8-18	0.32

Material
Copper Alloy - BS EN 1982,
Bolt - Stainless Steel or Copper Alloy

Tested Standard
IEC 62561 Part 1
TIS 3024 Part 1

Application
Hold stranded copper or solid copper conductors to rebar.

Terminal Lug



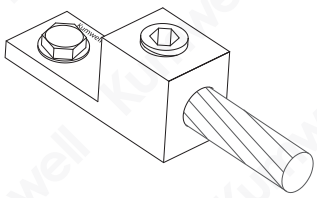

Code No.	Cable Size (mm²)	Stud Size (in)	Weight (kg)
LXTEL 35	6-35	3/16	0.10
LXTEL 70	50-70	5/16	0.15
LXTEL 120	95-120	5/16	0.24
LXTEL 185	150-185	1/2	0.35
LXTEL 300	240-300	1/2	0.60

Material
Copper Alloy - BS EN 1982,
Bolt - Silicon Bronze

Tested Standard
IEC 62561 Part 1
TIS 3024 Part 1

Application
Connect copper stranded or solid conductors to flat bar.

Split Bolt



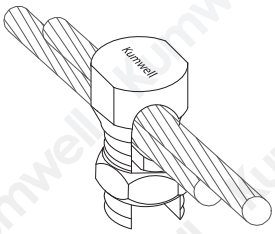

Code No.	Cable Size (mm²)		Weight (kg)
	Run	Tap	
LXSB 70	70	70	0.10

Material
Copper Alloy - BS EN 1982

Tested Standard
IEC 62561 Part 1
TIS 3024 Part 1

Application
Suitable for joint copper conductors (above ground).

Universal Connector



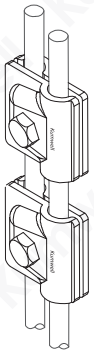

Universal Connector is made of Stainless Steel. There are two types of connecting process cross joint and parallel joint. The contact resistance shall be less than 1 μΩ, as well as the connected conductors tensile force shall be more than 900 N

Code No.	Cable Size (mm)	Torque (N•m)	Bolt Size (mm)	Weight (kg)
LCAC-SS-10-M10	8-10	26	M10x35 (1.5)	0.11

Material
Stainless Steel 304

Tested Standard
IEC 62561 Part 1
TIS 3024 Part 1

Application
Connect Galvanized / Stainless Steel to round conductor.

Shear Bolt Connector



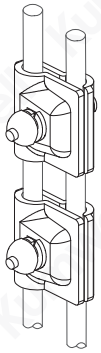

Shear Bolt Connector provide connection for cross joint or parallel joint. The shear bolt provide quick installation and the superior of connection.

Code No.	Cable Size (mm)	Torque (N•m)	Bolt Size (mm)	Weight (kg)
LCAC-SS-10-M10-N	8-10	26	M10x35 (1.5)	0.11

Material
Stainless Steel 304

Tested Standard
IEC 62561 Part 1
TIS 3024 Part 1

Application
Connect Galvanized / Stainless Steel to round conductor.

Rebar Clamp Connector with Shear Bolt



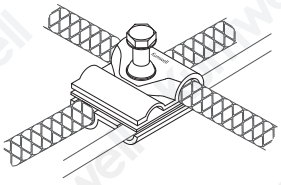

The universal clamp connector for connection type T-joint, cross joint and parallel join between rebar to rebar, rebar to round conductor, round conductor to round conductor. The shear bolt provide quick installation and the superior of connection.

Code No.	Rebar Size (mm)	Conductor Size (mm)
GCRER-SB-25-10	16 - 25	8 - 10
GCRER-SB-25-20	16 - 25	14 - 20
GCRER-SB-40-10	32 - 40	8 - 10
GCRER-SB-40-20	32 - 40	14 - 20

Material
Zinced Steel

Tested Standard
IEC 62561 Part 1
TIS 3024 Part 1

Application
Connect Galvanized / Stainless Steel to round conductor.

Q-Connector



Code No.	Conductor (Ø) (mm)	Weight (kg)
GXCCSS 8	8	0.068
GXCCSS 10	10	0.068
GXCCSS 10-FCC	10	0.068

Material
Stainless Steel 304

Tested Standard
IEC 62561 Part 4
TIS 3024 Part 4

Application
Fix Galvanized /Stainless Steel round conductor

Z-Connector

Galvanized Steel

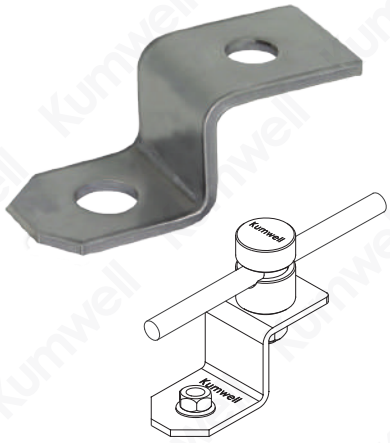

Code No.	Hold Size (mm)	Weight (kg)
TSSS 7030-1H	11	0.054

Material
Stainless Steel 304

Tested Standard
IEC 62561 Part 1
TIS 3024 Part 1

Application
Connect Q-Connector to Earth Point.

Tape Support



Code No.	Tape Size (mm)	Weight (kg/m)
LTSSS-303.5	20x3 to 30x3.5	0.112

Material
Stainless Steel 304

Tested Standard
IEC 62561 Part 4
TIS 3024 Part 4

Application
Fix Galvanized /Stainless Steel tape conductor

Tape Lug Connector

Tape Lug Connector is use for connecting tape conductor to earth point or earth termination without drilling.



Code No.	Tape Size (mm)	Weight (kg/m)
LTSSC-303.5	20x3 to 30x3.5	0.140

Material
Stainless Steel 304

Tested Standard
IEC 62561 Part 1
TIS 3024 Part 1

Application
Fix and connect Galvanized /Stainless Steel to tape conductor.

Square Tape Clamp



Code No.	Tape Conductor (mm)	Torque (N•m)	Weight (kg/m)
LCACSS-T303.5	20x3 to 30x3.5	14	0.242
LCACSS-T406	30x3.5 to 40x6	14	0.312

Material
Stainless Steel 304

Tested Standard
IEC 62561 Part 1
TIS 3024 Part 1

Application
Connect Galvanized / Stainless Steel tape conductor

Round and Tape Connector



Code No.	Tape Conductor (mm)	Circutar Conductor (Ø) (mm)	Weight (kg)
LCACSS-W10-T303.5	20x3 to 30x3.5	8-10	0.236
LCACSS-W10-T406	30x3.5 to 40x4	8-10	0.306

Material
Stainless Steel 304

Tested Standard
IEC 62561 Part 1
TIS 3024 Part 1

Application
Connect Galvanized /Stainless Steel tape to round conductor

Circular Conductors Holders



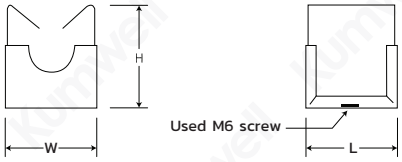

Code No.	Conductor Size (mm)	Dimension (mm) W	L	H	Weight (kg)
LSCH-8	8	22	22	31	0.020

Material
Stainless Steel 304

Tested Standard
IEC 62561 Part 4
TIS 3024 Part 4

Application
Hold Circular conductors to wall or floor and install above metal sheet clamp for GI Roof.

Tape Clip with Adhesive Base



Code No.	Tape Size (mm)	Base Diameter (Ø) (mm)	Weight (kg)
LTCS 253	25x3	63	0.030
LTCS 254	25x4	63	0.030
LTCS 256	25x6	63	0.030
LTCS 253 PVC	25x3 with PVC	63	0.030

Material
High grade and UV stabilized polypropylene (PP)
Bolt - Stainless Steel

Tested Standard
IEC 62561 Part 4
TIS 3024 Part 4

Application
Hold conductors on Metallic or Plastic roof

Note : Special color can be requested.

Pyramid Holdfast



Code No.	Tape Size (mm)	Base Diameter (Ø) WxL (mm)	Weight (kg)
LTPH 253	25x3	120x120	1.250
LTPH 254	25x4	120x120	1.250
LTPH 256	25x6	120x120	1.250
LTPH 253 PVC	25x3 with PVC	120x120	1.250

Material
High grade and UV stabilized polypropylene (PP)
Filled-in-Concrete.
Bolt - Stainless Steel

Tested Standard
IEC 62561 Part 4
TIS 3024 Part 4

Application
Hold tape conductors on PVC or metal flat surface with recommended heavy duty glue

Note : Special color can be requested.

Non Metallic DC Clips



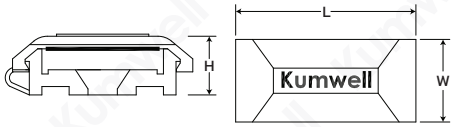

Code No.	Tape Size (mm)	Dimension (mm) W	L	H	Weight (kg)
LNDCP 253	25x3	20	37	14	0.6
LNDCP 254	25x4	20	37	14	0.6
LNDCP 256	25x6	20	37	14	0.6
LNDCP 253PVC	25x3 with PVC	20	37	14	0.6

Material
High grade and UV stabilized polypropylene (PP)

Tested Standard
IEC 62561 Part 4
TIS 3024 Part 4

Application
Hold tape conductors on PVC or metal flat surface

Note : Special color can be requested.

Adhesive Base



Code No.	Base Diameter (Ø) (mm)	Weight (kg)
LADSB	63	2.2

Material
High grade and UV stabilized polypropylene (PP)

Application
Support tape clip by adhere to PVC or metal
flat surface with recommended heavy duty gule

Note : Special color can be requested.

Insulator Support



Code No.	Color	Weight (kg)
LISUV-3-25B	Black	0.012
LISUV-3-25W	White	0.012

Material
High grade and UV stabilized Nylon 6

Application
Support equipment as an insulator

Note : Special color can be requested.

Accessories

Self Drilling Countersunk Head



Code No.	Thread Size	Length (in)	Weight per 100 pcs. (kg)
SDCH-M6-1	M6	1"	0.5
SDCH-M6-112	M6	1½"	0.6
SDCH-M6-2	M6	2"	0.7
SDCH-M6-212	M6	2½"	0.8
SDCH-M6-3	M6	3"	0.9
SDCH-M6-312	M6	3½"	1

Material
Stainless Steel 304

Application
Suitable for install saddle or fastener on steel or wooden material.
(1 box = 100 pcs.)

Hex Flange Head Self Drilling Screw With Epdm Seal Washer



Code No.	Thread Size	Length (in)	Weight per 100 pcs. (kg)
HSDE-M6-1	M6	1"	0.5
HSDE-M6-112	M6	1½"	0.6
HSDE-M6-2	M6	2"	0.7
HSDE-M6-212	M6	2½"	0.8
HSDE-M6-3	M6	3"	0.9
HSDE-M6-312	M6	3½"	1

Material
Stainless Steel 304

Application
Suitable for install saddle or fastener on steel material where water leakage protection needed. (1 box = 100 pcs.)

Lightweight Brick Anchor With Screw



Code No.	Thread Size	Length (in)	Weight per 100 pcs. (kg)
LWBAS-M6	M6	1½"	2
LWBAS-M8	M8	1½"	3.5

Material
Stainless Steel 304

Application
Suitable for install saddle or fastener on concrete or brick.
(1 box = 100 pcs.)

Adhesive



LADHS



LPRM

Code No.	Material	Standard Pack (g)	Weight (kg)
LADHS	Ethly Cyanoacrylate	20	0.02
LPRM	Aliphatic Amine	50	0.05

Application
Adhesive is suitable for adhesion between the adhesive base and Metallic or Plastic roof.
Primer is special product for cleaning the adhesive base and material's surface before adhesion.

Usage
15 pieces and Primer for 50 pieces of Adhesive base

Solvent Cleaning



Code No.	Volume (ml)	Weight (kg)
ALSC	800	0.70

Application
Clean conductor and clamp before connection

Lightning Pole



Self-Standing Lightning Pole (LTSP Model)



Lightning Pole (LTLP Model)

Nowadays a lot of buildings should install the electrical or telecommunication system such as satellite dish, antenna, solar cell, chiller, cooling tower etc. on the rooftop to serves the system in the building.

To prevent devices from lightning damage can be installed air termination system which complies with IEC 62305 standard, by using the air termination system to cover and protect the devices. In designing of air termination system, the air termination rod shall be sufficient height to protect.

The lightning pole is suitable to rooftop building protection due to the height of the pole which can provide a larger protective area than the air terminal rod to preserve the aesthetic of the landscape of the buildings.

The lightning pole shoud withstand the wind load due to the severe storm in each area. There shoud be considered the wind load test withstand and the preparation of the base where using the reinforced concrete footing for installation.

Kumwell Self-Standing Lightning Pole (LTSP Model) designed for height up to 6 m. (higher size can be request) which has compact size than others, providing light weight, easy for transportation, and installation. LTSP can take the wind load force at wind speed up to 160 km/h. suitable for building's rooftop or solar farm to avoid the shading from the pole.

Kumwell Lightning Pole (LTLP Model) is another model where has more strength of the mast's structure height up to 30 m. can take the wind load force at wind speed up to 150 km/h. suitable for large industrial where can constructed with reinforce concrete footing.

Lightning Pole



Code No.	Figure	Dimensions (mm)															O.D. Ø(mm)	Flange Base Dimensions (mm)			Approx. Weight (kg)
		LO (mm)	Height	L	L1	L2	L3	L4	L5	L6	OV.1	OV.2	OV.3	OV.4	OV.5	OV.6		Figure	Ø Hole (mm)	D (mm)	
LTLP-3000	1	2400	3000	600	2400	-	-	-	-	-	-	-	-	-	-	-	60	7	25	150	27
LTLP-6000	1	5400	6000	600	5400	-	-	-	-	-	-	-	-	-	-	-	60	7	32	250	79
LTLP-9000	2	8400	9000	600	5400	3200	-	-	-	-	200	-	-	-	-	-	60	7	32	250	133
LTLP-12000	3	11400	12000	600	5400	3300	3240	-	-	-	300	240	-	-	-	-	76	7	32	300	227
LTLP-15000	3	14400	15000	600	5400	4880	4780	-	-	-	380	280	-	-	-	-	76	7	32	350	311
LTLP-18000	4	17400	18000	600	5400	4800	4800	3600	-	-	500	400	300	300	300	300	140	8	32	450	461
LTLP-20000	4	19400	20000	600	5400	5600	5500	4400	-	-	600	500	400	400	400	400	140	9	32	550	664
LTLP-25000	5	24400	25000	600	5900	5600	5500	5400	4200	-	700	600	500	400	-	-	140	10	38	619	-
LTLP-30000	6	29400	30000	600	5900	5600	5500	5400	5400	4400	700	600	600	500	400	-	140	11	38	670	-
LTLP-33000	4	32400	33000	600	10000	10800	10800	3100	-	-	800	800	700	-	-	-	177	12	45	720	-

Material
Air - Terminal, Busbar - Solid Copper - BS EN 13601
Saddle - Copper Alloy - BS EN 1982
Pole - Hot Dip Galvanized Steel ASTM A123
Down conductor - 50 sq mm IEC 01

Tested Standard
IEC 62561 Part 1, TIS 3024 Part 1
IEC 62561 Part 2, TIS 3024 Part 2
Wind Speed withstand up to 150 km/h.

Application
Suitable for any areas or projects where air terminal is unable to install and mount on the roof such as oil / gas tank, solar farm etc.



Fig.1

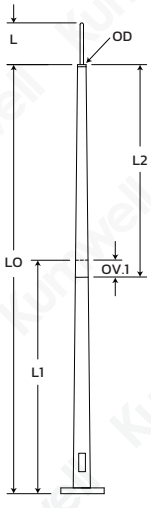

Fig.2

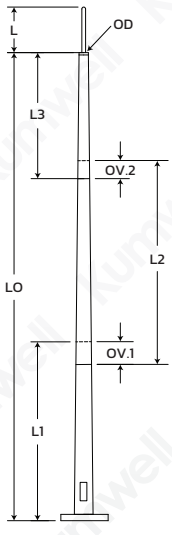

Fig.3

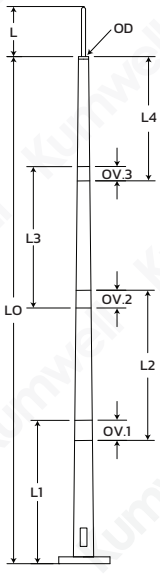

Fig.4

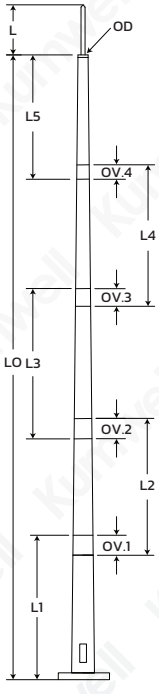

Fig.5

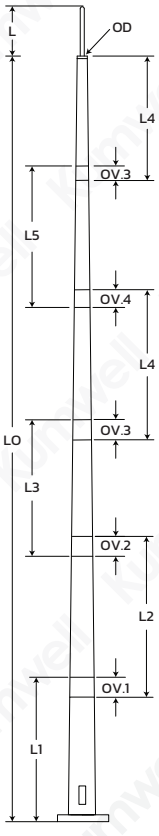

Fig.6

Flange Base Detail

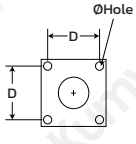

Fig.7

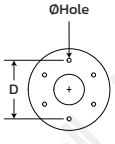

Fig.8

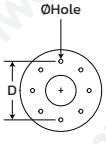

Fig.9

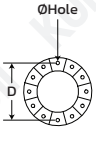

Fig.10

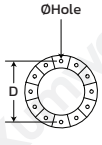

Fig.11

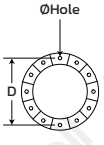

Fig.12

Self - Standing Lightning Pole

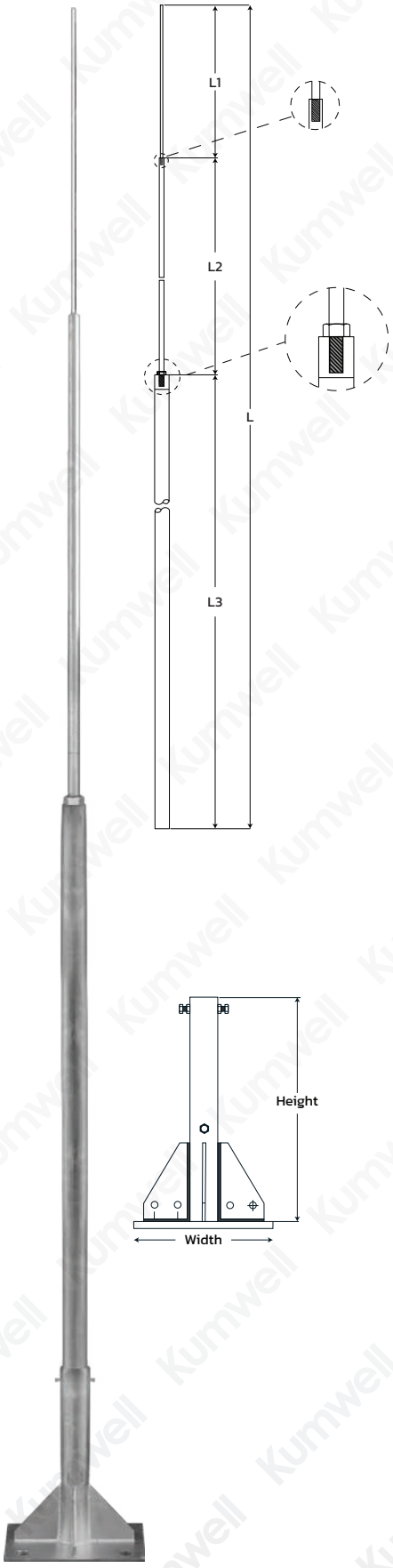

Pole

Code No.	L - Height (mm)	Dimension (mm) L1	L2	L3	Weight (kg)
LTSP - 3000	3000	500	1000	1500	3.29
LTSP - 4500	4500	500	1500	2500	5.58
LTSP - 6000	6000	500	2000	3500	7.87

Material
L1 : Air rod - Stainless Steel SUS 304 Dia. 10 mm.
L2 : Stainless Round Bar SUS 304 Dia. 16 mm.
L3 : Stainless Steel Pipe SUS 304 Dia. 42 mm.

Tested Standard
IEC 62561 Part 1, TIS 3024 Part 1
IEC 62561 Part 2, TIS 3024 Part 2
Wind Speed withstand up to 160 km/h.

Application
Suitable for lightning protection,
Select a foundation type below.

Fixing foundation

Code No.	Dimension (mm) Height	Width	Weight (kg)
LTSP-F	500	300	15.70

Material
Hot Dip Galvanized Steel

Application
Suitable for support self-standing lightning pole. Installation with J-bolt 3/4"(on request) fixing ambed in concrete foundation.

Metal Sheet Clamp

Kumwell has continually developed and designed Metal Sheet Clamp for easier, faster and more safety to installation on the metal sheet roof when installing lightning protection system to meet IEC 62561.

We have designed it to help you to install Square Neck Bolt and Flange Locking Nut into the square on each side of T-Block easily and faster than ever. The Stopper also enables all accessories double locking tightly. Moreover, the Flange Locking Nut and the Socket are designed to prevent any accessory loosen from Metal Sheet Clamp during installation.









The unique design provide safety and easy work for installer where they can tighten by one hand while another hand can hold safety rope in case of accident.

Due to a large roof area where there are many tons of conductor, metal sheet clamp shall be provide highly mechanical strength to fixing the LPSC parts to the roof as well as good corrosion resistance to suit for any expose environment.

Metal sheet clamp shall be tested according to IEC 62561-4 (Requirement for Conductor Fastener) to secure the safety for installation.

Features & Benefits

- Quick and easy to install
- Safety for installer
- High mechanical strength, firmly secured to roof profile
- Corrosion resistance
- Custom made to suit any roof profile

Metal Sheet Clamp



LYCMSS-AN



LYCMSS-AA



LYCMSS-CN



LYCMSS-C-2N



LYCMSS-DN



LYCMSS-EN



LYCMSS-ON



LYCMSS-QN



LYRHT-AN



LYRHT-BN

Code No.	Weight (kg)
LYCMSS-AN	0.09
LYCMSS-AA	0.09
LYCMSS-CN	0.07
LYCMSS-DN	0.12
LYCMSS-EN	0.08
LYCMSS-NN	0.08
LYCMSS-ON	0.12
LYCMSS-QN	0.08
LYRHT-AN	0.03
LYRHT-BN	0.07

Material
Body - Stainless Steel
Bolt - Stainless Steel

Tested Standard
IEC 62561 Part 4
TIS 3024 Part 4

Application
Hold supporters or saddles to metal roof

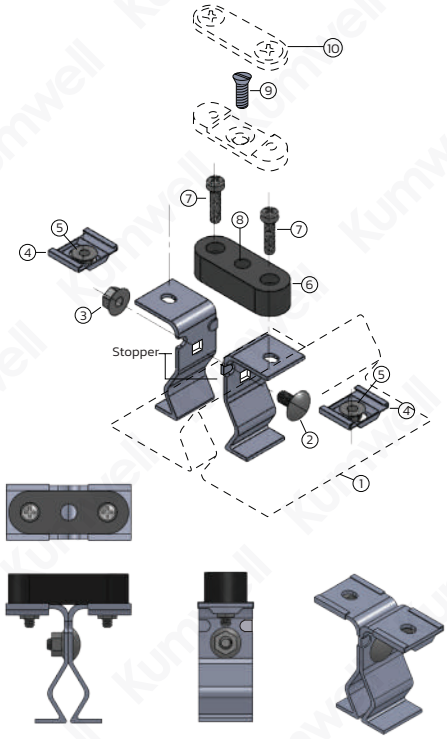

Item	Description	Q'ty
1	Metal Sheet Roof	-
2	Square Neck Bolt M6	1
3	Flang Locking Nut M6	1
4	Socket	2
5	Flang Locking Nut M5	2
6	Insulator	1
7	Screw M5	2
8	Nut 1/4" in Insulator	1
9	Stainless Screw 1/4"	1
10	Tape Support	-

"Quick Installation"

Note : Special new model GI cladding can be requested.

Roof Holders



LYRHT 130-120



LYRHT 117-35

For Hip or Ridge Tiles

Code No.	Dimensions (mm) Vary (H) Max.	Vary (H) Min.	Vary (L) Max.	Vary (L) Min.	Weight (kg)
LYRHT 130-120	180	145	340	225	0.25
LYRHT 140-120	156	104	394	207	0.23
LYRHT 117-35	180	90	242	235	0.25

Material
Stainless Steel

Tested Standard
IEC 62561 Part 4
TIS 3024 Part 4

Application
Hold conductors for hip, and sheet tile roof install.

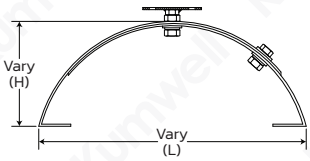

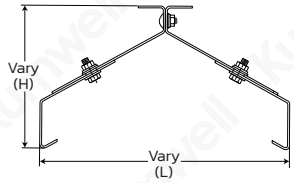



LYRHU-XXX

For Tile Sheet

Code No.	Dimensions (mm) A	B	L	Weight (kg)
LYRHU-702	25	20	205	0.02
LYRHU-704	25	20	475	0.05

Material
Stainless Steel

Tested Standard
IEC 62561 Part 4
TIS 3024 Part 4

Application
Hold conductors for hip, and sheet tile roof install.

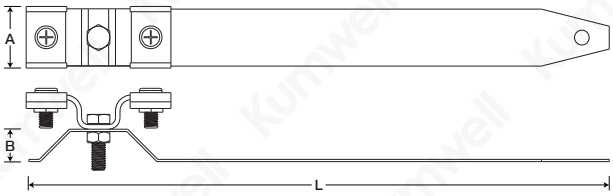

Anti-Vandal Down Conductor Guard



Code No.	Tape Size (mm)	Length (mm)	Weight (kg)
LAVCG	25x3, 25x4	2400	3

Material
Zinc-Coated Steel

Application
Protect tape conductor

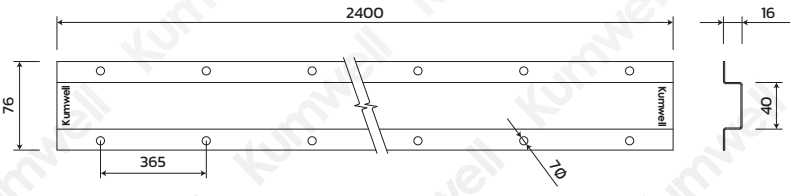

Note : Fix using round head wood screws 1 1/2" x no.10 and wall plug.

Conductor

When designing a structural lightning protection system using the Faraday Cage principle, it is possible to use one or more of a variety of available conductor systems; namely tape conductor, circular conductor or stranded conductor.

The decision about which type to use is often based more on country-specific historical preferences or aesthetic considerations than the superiority of one type over another. High quality Kumwell conductors, plus appropriate fittings, are available for all three systems.

Tape conductor system

Tape conductors are easy to install, with no need to straighten for a neat finish. Available in copper or aluminium, tape conductor can be installed bare or with a choice of PVC coverings, to enable the tape to blend with modern building fabrics. Tinned copper tape is also available for applications that require additional protection measures.

Circular conductor system

Circular conductors can be used in applications where aesthetic considerations are important. Circular conductor is less conspicuous than the tape conductor system, and lends itself much better to being concealed.
Available in copper or aluminium, circular conductors can also have PVC coverings.

A coil of circular conductor can be quickly installed, being easy to bend in any plane, and only needing a straightening tool to give a very neat finish.

Stranded conductor system

The Kumwell stranded conductors are available in copper and copper-clad steel wire, and are supplied bare.
The copper-clad steel wire can reduce risk is stolen.

Selection Materials

Material	Corrosion resistance suitable for	Use		
		In open air	In earth	In concrete
Copper	Normal environments	Solid tape	Solid tape	Solid tape
		Solid round	Solid round	Solid round
		Stranded	Stranded	Stranded
Tin plated copper	Near seaside	Solid tape	Solid tape	Solid tape
		Solid round	Solid round	Solid round
Copper with lead	The chimney emit toxic gas	Solid tape	Unsuitable	Unsuitable
Tin copper with lead	Area especically high salty and acidty	Solid tape	Unsuitable	Unsuitable
Aluminium	On the metal sheet roof because it does not corrode	Solid tape	Unsuitable	Unsuitable
		Solid round		
Copper-Clad steel	Normal environments	Solid tape	Solid tape	Solid tape
		Solid round	Solid round	Solid round

Note : Copper/Aluminium joints should be avoided wherever possible. In cases where they cannot be avoided, the connections should be used Bi-Metallic Connector.

Tape Conductors

Bare Copper



Code No.	Size (mm)	Size (mm²)	Coil Size (m)	Weight (kg/m)
COBCT 203	20x3	60	100	0.54
COBCT 253	25x3	75	100	0.67
COBCT 254	25x4	100	100	0.90
COBCT 256	25x6	150	25	1.34
COBCT 303	30x3	90	50	0.81
COBCT 304	30x4	120	50	1.08
COBCT 305	30x5	150	50	1.34
COBCT 324	32x4	128	50	1.15
COBCT 404	40x4	160	50	1.43
COBCT 405	40x5	200	25	1.79
COBCT 406	40x6	240	25	2.15
COBCT 503	50x3	150	20	1.34
COBCT 505	50x5	250	20	2.24
COBCT 506	50x6	300	20	2.62

Material
Copper - BS EN 13601

Tested Standard
IEC 62561 Part 2
TIS 3024 Part 2

Application
- Shall be use in grounding and lightning protection system.
- Suitable for typical installation.

Tinned Copper



Code No.	Size (mm)	Size (mm²)	Coil Size (m)	Weight (kg/m)
COBCT 203T	20x3	60	100	0.54
COBCT 253T	25x3	75	100	0.67
COBCT 254T	25x4	100	100	0.90
COBCT 256T	25x6	150	25	1.34
COBCT 303T	30x3	90	50	0.81
COBCT 304T	30x4	120	50	1.08
COBCT 305T	30x5	150	50	1.34
COBCT 324T	32x4	128	50	1.15
COBCT 404T	40x4	160	50	1.43
COBCT 405T	40x5	200	25	1.79
COBCT 406T	40x6	240	25	2.15
COBCT 503T	50x3	150	20	1.34
COBCT 505T	50x5	250	20	2.24
COBCT 506T	50x6	300	20	2.62

Material
Tin Plated Copper - BS EN 13601

Tested Standard
IEC 62561 Part 2
TIS 3024 Part 2

Application
- Shall be use in grounding and lightning protection system.
- Suitable for high corrosion area.

Bare Aluminium



Code No.	Size (mm)	Size (mm²)	Coil Size (m)	Weight (kg/m)
COBAT 253	25x3	75	50	0.20
COBAT 254	25x4	100	50	0.27
COBAT 256	25x6	150	40	0.41

Material
Aluminium - BS 2898

Tested Standard
IEC 62561 Part 2
TIS 3024 Part 2

Application
- Shall be use in air termination and down conductor system.
- Shall not be embedded in ground or concrete.
- Suitable for install on metal sheet surface (roof, wall, etc.).

Tape Conductors

Galvanized Steel Tape is made of special steel with low resistivity. The electrical resistivity is less than 0.15 μΩm and, tensile strength is less than 490 N/mm²



Galvanized Steel Tape

Code No.	Size (mm)	Size (mm²)	Coil Size (m)	Weight (kg/m)
COBGAT 203	20x3	60	50	0.47
COBGAT 3035	30x3.5	105	50	0.83

Material
Hot-Dip Galvanized Steel

Tested Standard
IEC 62561 Part 2
TIS 3024 Part 2

Application
- Shall be use in down conductor system.
- Suitable for embedded in concrete.

Stainless Steel Tape is made of stainless steel with a chromium ≥ 16%, nickel ≥ 8%, molybdenum ≥ 2% and carbon ≤ 0.07% The electrical resistivity is less than 0.8 μΩm



Stainless Steel Tape

Code No.	Grade	Size (mm)	Size (mm)	Coil Size (m)	Weight (kg/m)
COTSS316L-303.5	316L	30x3.5	105	50	0.84

Material
Stainless Steel - 316L

Tested Standard
IEC 62561 Part 2
TIS 3024 Part 2

Application
- Shall be use in grounding and lightning protection system.
- Suitable for extra high corrosion area.

Tape Conductors

Copper with PVC



Code No.	Size (mm)	Coil Size (m)	Weight (kg/m)
COBCT 253P	25x3	50	0.76
COBCT 256P	25x6	25	1.44
COBCT 253P-LSHF	25x3	50	0.81
COBCT 256P-LSHF	25x6	25	1.49

Material
High conductivity copper - BS EN 13601
Green PVC cover with low smoke halogen free (LSHF)

Tested Standard
IEC 62561 Part 2
TIS 3024 Part 2

Application
- Shall be use in down conductor system.
- Suitable for typical installation.

Aluminium with PVC



Code No.	Size (mm)	Coil Size (m)	Weight (kg/m)
COBAT 253P	25x3	50	0.26
COBAT 254P	25x4	50	0.36
COBAT 253P-LSHF	25x3	50	0.34
COBAT 254P-LSHF	25x4	50	0.41

Material
Aluminium tape - BS 2898
Green PVC cover with low smoke halogen free (LSHF)

Tested Standard
IEC 62561 Part 2
TIS 3024 Part 2

Application
- Shall be use in down conductor system.
- Suitable for typical installation.

Copper with Lead



Code No.	Size (mm)	Coil Size (m)	Lead-Cover Thickness (m)	Weight (kg/m)
COBCTL 253	25x3	25	2	2.21
COBCTL 506	50x6	20	2	5.57

Material
Copper with Lead
(Copper - BS EN 13601)

Tested Standard
IEC 62561 Part 2
TIS 3024 Part 2

Application
- Shall be use in down conductor system.
- Shall not be embedded in ground.
- Suitable for Oil & gas industrial area.

Tinned Copper with Lead



Code No.	Size (mm)	Coil Size (m)	Lead-Cover Thickness (m)	Weight (kg/m)
COBCTL 506T	50x6	25	2	5.57

Material
Tinned Copper with Lead
(Copper - BS EN 13601)

Tested Standard
IEC 62561 Part 2
TIS 3024 Part 2

Application
- Shall be use in down conductor system.
- Shall not be embedded in ground.
- Suitable for Oil & gas industrial area especially in high salty or acidity environment.

Circular Conductors

Bare Copper



Code No.	Conductor (Ø) (mm)	Cross Section (mm²)	Coil Size (m)	Weight (kg/m)
COSC-8	8	50	50	0.45
COSC-9.5	9.5	70	50	0.64
COSC-11	11	95	50	0.85
COSC-12.4	12.4	120	50	1.08
COSC-13.9	13.9	150	50	1.36
COSC-15.4	15.4	185	20	1.67
COSC-17.5	17.5	240	20	2.16

Material
Copper - BS EN 13601

Tested Standard
IEC 62561 Part 2
TIS 3024 Part 2

Application
- Shall be use in grounding and lightning protection system.
- Suitable for typical installation.

Tinned Copper



Code No.	Conductor (Ø) (mm)	Cross Section (mm²)	Coil Size (m)	Weight (kg/m)
COSC-8T	8	50	50	0.45
COSC-9.5T	9.5	70	50	0.64
COSC-11T	11	95	50	0.85

Material
Tin Plated Copper - BS EN 13601

Tested Standard
IEC 62561 Part 2
TIS 3024 Part 2

Application
- Shall be use in grounding and lightning protection system.
- Suitable for high corrosion area.

Bare Aluminium



Code No.	Conductor (Ø) (mm)	Cross Section (mm²)	Coil Size (m)	Weight (kg/m)
COSA-8	8	50	50	0.14
COSA-10	10	78	50	0.21

Material
Aluminium - BS 2898

Tested Standard
IEC 62561 Part 2
TIS 3024 Part 2

Application
- Shall be use in air termination and down conductor system.
- Shall not embedded in ground or concrete.
- Suitable for install on metal sheet surface (roof, wall, etc.).

Galvanized Steel Conductor is made of special steel with low resistivity. The electrical resistivity is less than 0.15 μΩm and, tensile strength is less than 490 N/mm²

Galvanized Steel Circular



Code No.	Conductor (Ø) (mm)	Cross Section (mm²)	Weight (kg/m)	Coil Lenght (m)	Coil Weight (kg)
COGS-8	8	50	0.395	50	approx. 20
COGS-10	10	78	0.620	50	approx. 31

Material
Hot Dip Galvanized Steel

Tested Standard
IEC 62561 Part 2
TIS 3024 Part 2

Application
- Shall be use in down conductor system.
- Suitable for embedded in concrete.

Circular Conductors

Stainless Steel Conductor is made of special steel with low resistivity. The electrical resistivity is less than 0.15 μΩm and, tensile strength is less than 490 N/mm²



Stainless Steel Circular

Code No.	Grade	Conductor (Ø) (mm)	Cross Section (mm²)	Weight (kg/m)	Coil Lenght (m)	Coil Weight (kg)
COSS316L-8	316L	8	50	0.401	50	approx. 20
COSS316L-10	316L	10	78	0.63	50	approx. 32

Material
Stainless Steel - 316L

Tested Standard
IEC 62561 Part 2
TIS 3024 Part 2

Application
- Shall be use in grounding and lightning protection system.
- Suitable for extra high corrosion area.



Copper with PVC

Code No.	Conductor (Ø) (mm)	Coil Size (m)	Weight (kg/m)
COSC-8P	8	50	0.50
COSC-9.5P	9.5	50	0.70
COSC-8P-LSHF	8	50	0.52
COSC-9.5P-LSHF	9.5	50	0.72

Material
High conductivity copper - BS EN 13601
Green PVC cover with low smoke halogen free

Tested Standard
IEC 62561 Part 2
TIS 3024 Part 2

Application
- Shall be use in down conductor system.
- Suitable for typical installation.

Copper-Bonded Steel Round Conductor is made of molecularly bonding pure electrolytic copper onto a low resistivity steel. The electrical resistivity is less than 0.1 μΩm, copper thickness is more than 254 micron as well as tensile strength is less than 490 N/mm²



Copper-Bonded Steel Round Conductor

Code No.	Conductor (Ø) (mm)	Cross Section (mm²)	Weight (kg/m)	Coil Lenght (m)	Coil Weight (kg)
WE-COCBU-8	8	50	0.40	50	approx. 20
WE-COCBU-10	10	78	0.63	50	approx. 32

Material
Copper-Bonded Steel

Tested Standard
IEC 62561 Part 2
TIS 3024 Part 2

Application
- Shall be use in grounding and lightning protection system.
- Suitable for typical installation.
- Theft prevention.

Conductor Bender

Conductor Bender is manually bend the conductor to preferred shape.



Code No.	Conductor Size (mm)	Weight (kg/set)
TOHCS-RT	8-10	1.72

Material
Zinc plated steel

Application
Suitable for bending the conductor to preferred shape.

Note : 1 set = 2 pieces

Conductor Straightener

Conductor Straightener is manually machine for conductor size 8-10 mm



Code No.	Conductor Size (mm)	Weight (kg/set)
TOCS RT	8-10	11.85

Material
Body - Zinc plated steel.

Application
Suitable for straightening the conductor manually.

Conductor Straightener with electric drive

Conductor Straightener with electric drive is motor drive machine for conductor size 8-10 mm



Code No.	Conductor Size (mm)	Weight (kg/set)
TOHCS 8-10P	8-10	approx. 50

Material
Body - Zinc plated steel.

Application
Suitable for straightening the conductor by electric motor drive.

Annealed Copper-Clad Steel Wire

Kumwell Annealed Copper-Clad Steel Wire or CCS is made from copper cladding metallurgical bonded to concentric steel core with continuous solid cladding process. According to International Annealed Copper Standard (IACS), it is taken as 30% conductivity which is suitable for transmission line's and grounding in high corrosive area such as seaside.

Benefit

- High Conductivity
- High Corrosion Resistance



	Code No.	Cable Size (AWG)	Cable Size (mm²)	Diameter of Wire (mm)	Weight (kg/m)
Single wire	2AWG	2	33.18	6.50	0.26
7 wire strand	WE-COSS30-016	4	16.45	1.73	0.13
	WE-COSS30-050	7 No.8	58.56	3.26	0.48
	WE-COSS30-070	7 No.7	73.87	3.67	0.61
	WE-COSS30-095	7 No.6	93.10	4.11	0.77
19 wire strand	WE-COSS30-120	19 No.9	126.00	2.91	1.04
	WE-COSS30-150	19 No.8	158.97	3.26	1.31
	WE-COSS30-185	19 No.7	200.45	3.67	1.66
	WE-COSS30-240	19 No.6	252.66	4.11	2.09

Material
Annealed Copper - Clad Steel Wire ASTM B 910-B 910 M

Tested Standard
IEC 62561 Part 2, TIS 3024 Part 2
(For cable size ≥ 50 sq.mm only)

Application
- Shall be use in grounding and lightning protection system.
- Suitable for typical installation.
- Theft prevention.

Stranded Copper Conductor



Code No.	Cable Size (mm²)	Number and Diameter of Wire (no./mm.)	Weight (kg/m)
COSC 010	10	7/1.35	0.09
COSC 016	16	7/1.70	0.14
COSC 025	25	7/2.14	0.23
COSC 035	35	7/2.52	0.31
COSC 050	50	19/1.78	0.42
COSC 070	70	19/2.14	0.61
COSC 095	95	19/2.52	0.85
COSC 120	120	19/2.85	1.09
COSC 150	150	37/2.52	1.32
COSC 185	185	37/2.52	1.65
COSC 240	240	61/2.25	2.17
COSCS 070	70	7/3.55	0.64

Material
Copper

Tested Standard
IEC 62561 Part 2, TIS 3024 Part 2
(For cable size ≥ 50 sq.mm only)

Application
- Shall be use in grounding and lightning protection system.
- Suitable for typical installation.

Kumwell Insulating Cable (KIC)

The protection against lightning part 3 describe about down conductor of the building is hazardous from touch voltage or step voltage, even it's designed according to the standards.

The touch voltage will occurred when there is a different voltage from the ground potential rise. (Figure 1)

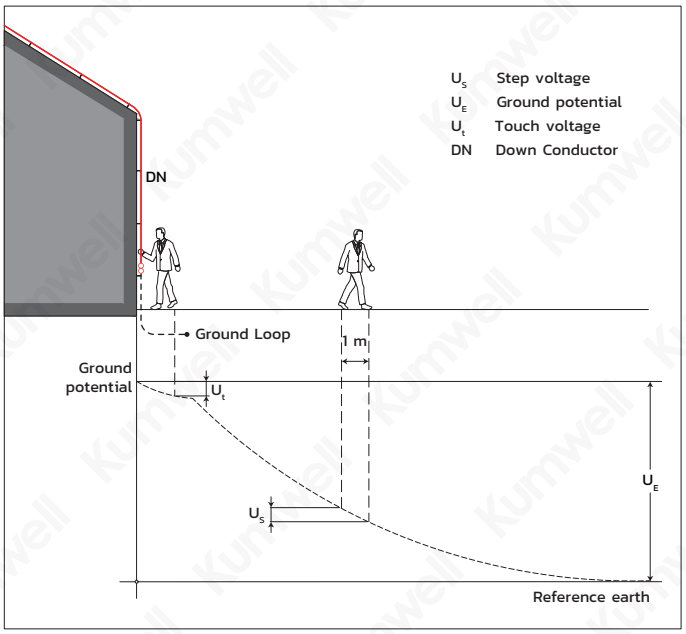

Figure 1 Touch voltage and step voltage

Therefore, down conductor of the building that accessible to people should be protect hazardous from the touch voltage.

Thus that the protection from the touch voltage defined in protection against lightning standard IEC 62305-3 as follows:

The hazard is reduced to a tolerable level if one of the following conditions is fulfilled

1. Under normal operation conditions there are no persons within 3 m. from the down conductors.
2. A system of at least 10 down conductors complying with 5.3.5 is employed
3. The contact resistance of the surface layer of the soil, within 3 m. of the down conductor is not less than 100 kΩ. (A layer of insulating material, e.g. asphalt, of 5 cm. thickness or a layer of gravel 15 cm. thick.)

If none of those conditions is fulfilled, can be using insulation through the down conductor adopted against injury to living being due to touch voltages.

The insulation should be using exposed providing giving a 100 kV, 1.2/50 μ such as cross-linked polyethylene (XLPE) the thickness provides 3 mm. at least. (Figure 2) Kumwell Insulating Down Conductor for Touch Voltage Protection (KIC) consist of solid rounded copper conductor 50 mm^2, insulated with high voltage resistance XLPE insulation. KIC has tested lightning impulse voltage withstand at 100 kV, 1.2/50 μs regarding to IEC 62305-3. Physical restrictions and/or warning notices to minimize the probability of down conductor being touched. Therefore, being like a down conductor of the building that accessible to people and protect the hazardous from the touch voltage.

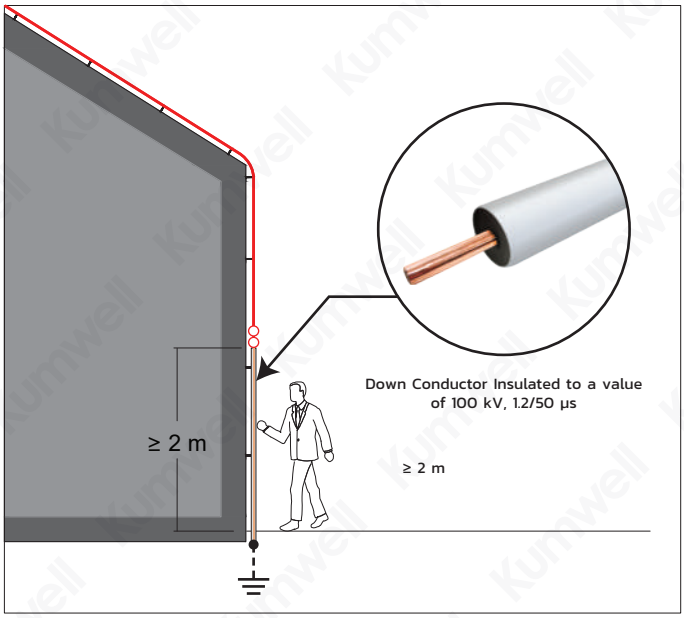

Figure 2 Protection against touch voltage by means of KIC Conductor

For Application

Hazardous from the touch voltage will happen at the distance 3 m around the down conductor.

Kumwell recommended the KIC Cable to install as a down conductor where people can access in that area.

For example

- Public building, temple, church, and palace etc.
- Entrance-Exit where a lot of people, shopping mall, and hospital etc.
- Building that need the new designed of lightning protection system to installed the down conductor outside the building.

Insulating Cable (KIC)



The area at risk of touch voltages for persons outside a building is located within a distance of 3 m. around the down conductor and at a height of ≥2 m. from ground level. The Insulation of the down-conductor is tested by a 100 kV, 1.2/50 µs impulse withstand voltage shall be adopted for protect dangerous of touch voltage. The KIC conductor has a copper core and a high voltage resistant XLPE insulation.

Code No.	KIC 50
Material of conductor	Cu
Material of insulation	XLPE
Outer sheath	UV-Resistant, Flame Retardant
Overall diameter	20 mm
Cross-section of the inner conductor	50 mm²
Colour of conductor	Grey

Material
Conductor : Copper
Insulation : XLPE with UV resistance sheath

Tested Standard
IEC 62561 Part 2
IEC 60060 Part 1: Lightning Impulse Voltage waveform 100 kV (1.2/50 µs)

Application
- The KIC Conductor is used as part of a down conductor system installed near the entrance of sheltering areas of buildings with high visitor frequency, such as theatres, cinemas, shopping centres, etc. Buildings or structures with public access (e.g. shelters).

Terminal for KIC



Code No.	LTATD-10-20

Material
Copper Alloy - BS EN 1982
Socket Screw - Stainless Steel 304

Tested Standard
IEC 62561 Part 1
TIS 3024 Part 1

Application
Connect KIC cable in the test box.

Shield for KIC



Code No.	KIC 50-SHD215

Material
Polymer

Tested Standard
IEC 60060 Part 1: Wet Test, Lightning Impulse Voltage waveform 100 kV (1.2/50 µs) when assemble with KIC Cable

Application
Prevent KIC cable from flashover voltages when raining.

Cable Support for KIC



Code No.	LCASSS-D20N

Material
Stainless Steel 304

Tested Standard
IEC 62561 Part 4

Application
Fix the KIC cable on wall or facade.

KHV Cable

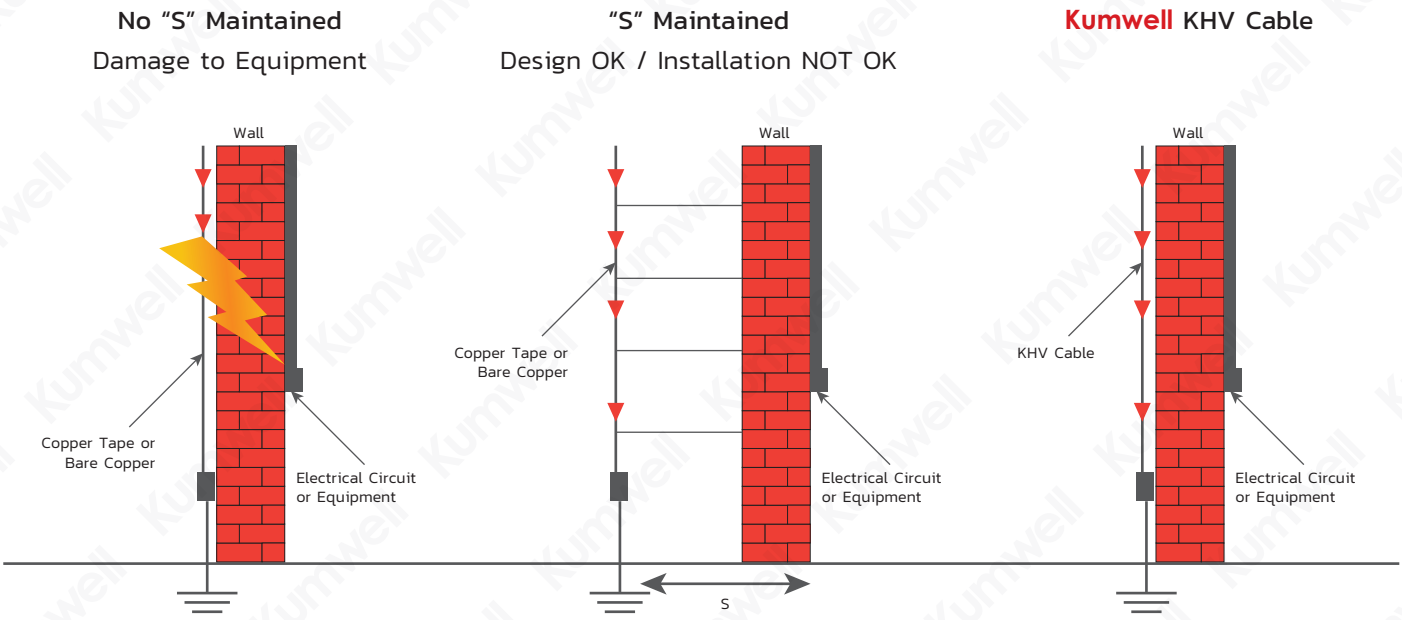

Nowadays, the modern building often utilize rooftop space for installing various equipment such as heating/cooling systems, solar panels and communication antennae, etc. The most common lightning protection for these traditional buildings is a non-isolated system where the lightning protection system components (LPSC) and metallic parts of the structure to be protected are bonded together to avoid the flash around the LPSC. The result is rooftop equipment, metallic parts and the structure itself may also carry a proportion of the partial lightning discharge current and damage can be result in sensitive electronic equipment.

Kumwell Insulating Down Conductor (KHV Cable) is an ideal solution to ensure the safety and the aesthetical appearance of the building. The principle of the insulating down conductor is that a lightning current-carrying conductor is covered with high-voltage insulation material to ensure that the required separation distance "s" from other conductive parts of the building structure or electrical equipment is maintained.

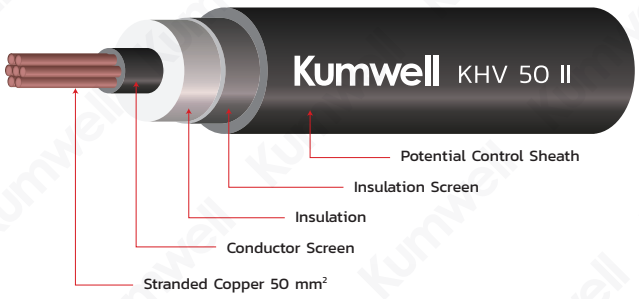

The requirements for insulating down conductor should be fulfilled by the following;

- The insulation should be sufficient to provide an equivalent separation distance.
- The cable should be prevented from creeping discharge.
- The conductor cross-sectional area should be sufficient to carry lightning current.



KHV Cable Application on Data Center Rooftop

KHV Cable has been successfully tested according to IEC 62561-8 to ensure the safety value of equivalent separation up to 0.5 meter in the air (s = 50cm) this was performed with standard high voltage impulse 1.2/50μs up to 500kV. KHV Cable consists of stranded copper 50 mm² which complies with conductor sizing of IEC 62305, insulation layers, and potential control outer sheath. It is suitable for high safety level projects such as Data Centers, Telecommunication Towers, Solar Farms, Solar Rooftops, Oil & Gas Industrial, etc.

High Voltage Insulating Down Conductor Cable (KHV)



KHV Cable with a voltage-controlled sheath is typically used as an isolated down conductor in the field of lightning protection for control the separation distance according to IEC 62305-3

Separation distance : There is a risk of uncontrolled flashover between parts of the external lightning protection system and metal and electrical installations in the building if the distance between the air termination system or down conductor and metal, electrical installations in the structure requiring protection is not sufficient. The separation distance is calculated according to IEC 62305-3. Advantage of KHV cable is the decrease of separation distance.

Code No.	KHV 50 II
Cross-section of the inner conductor (Cu)	50 mm²
Equivalent separate distance s (air)	≤ 0.50 m
Equivalent separate distance s (solid material)	≤ 1.00 m
Cable weight (approx.)	1058 (kg/km)
Cable length / Roll	50 (m/roll)
Colour of conductor	Black
Diameter Ø conductor	28.4 mm + 10%

Material
Copper

Tested Standard
IEC 62561 Part 8
IEC 60502

Application
- LPS installation shall be consider the safety separation distance (SSD) to prevent the consequences of lightning current from LPS components to nearby equipment e.g. satellite, solar panel, chiller, AHU, etc.
- Using for installation in explosion hazardous areas Ex zone 1 (gases, vapours, mists) as well as Ex zone 21 (dusts).

Terminal for KHV



Code No.	LTATD-10-284R

Material
Copper Alloy - BS EN 1982
Socket Screw - Stainless Steel 304

Tested Standard
IEC 62561 Part 1
TIS 3024 Part 1

Application
Connect KHV cable in the test box.

Cable Support for KHV



Code No.	LCASSS-D30N

Material
Stainless Steel 304

Tested Standard
IEC 62561 Part 4
TIS 3024 Part 4

Application
Fix the KHV cable on wall or facade.

Copper Lug for Exothermic Welding

1-Hole



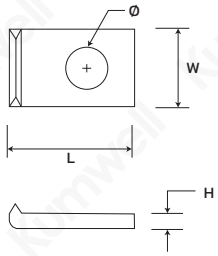

Code No.	Cable Size (mm²)	Dimensions (mm) W	L	H	Ø
CL-1-25	25	25.4	40	3.2	14.2
CL-1-35	35	25.4	40	3.2	14.2
CL-1-50	50	25.4	40	3.2	14.2
CL-1-70	70	25.4	40	3.2	14.2
CL-1-95	95	25.4	40	4.8	14.2
CL-1-120	120	25.4	40	4.8	14.2
CL-1-150	150	25.4	40	6.3	14.2
CL-1-185	185	25.4	40	6.3	14.2
CL-1-240	240	38.2	40	6.3	14.2

Material
Tin Plated Copper - BS EN 13601

Tested Standard
IEC 62561 Part 1
TIS 3024 Part 1

Application
Connect copper stranded or solid conductors by exothermic welding

2-Hole



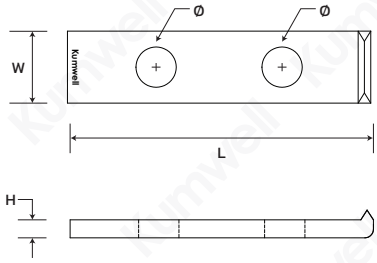

Code No.	Cable Size (mm²)	Dimensions (mm) W	L	H	Ø
CL-2-25	25	25.4	85	3.2	14.2
CL-2-35	35	25.4	85	3.2	14.2
CL-2-50	50	25.4	85	3.2	14.2
CL-2-70	70	25.4	85	3.2	14.2
CL-2-95	95	25.4	85	4.8	14.2
CL-2-120	120	25.4	85	4.8	14.2
CL-2-150	150	25.4	85	6.3	14.2
CL-2-185	185	25.4	85	6.3	14.2
CL-2-240	240	38.2	85	6.3	14.2

Material
Tin Plated Copper - BS EN 13601

Tested Standard
IEC 62561 Part 1
TIS 3024 Part 1

Application
Connect copper stranded or solid conductors by exothermic welding.

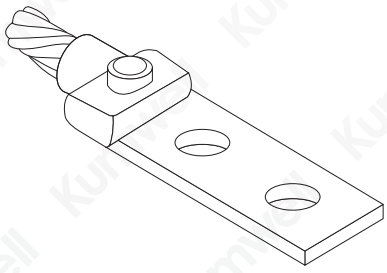

Exothermic Welding with (Lug)CB1

Copper Lugs



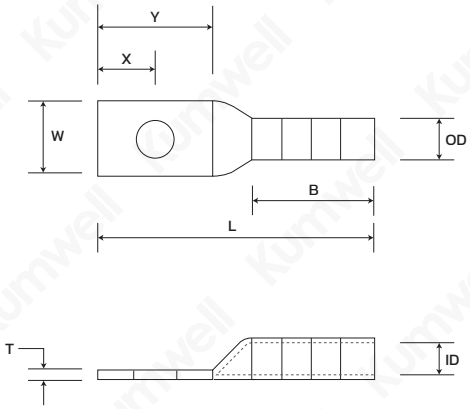

1-Hole Copper Lugs

Code No.	Copper Conductor		Stud Size	Dimensions (mm.)							
	AWG/MCM	mm²		I.D	O.D	L	W	X	Y	T	B
KOH 8-6	8	-	1/4"	4.6	7.1	38.9	10.9	6.4	15.7	2.5	18.0
KOH 6-6	6	16	1/4"	5.6	7.9	49.0	12.2	6.4	15.7	2.0	27.2
KOH 4-6	4	25	1/4"	7.1	9.7	49.5	14.0	6.4	15.7	2.3	27.2
KOH 2-8	2	35	5/16"	7.9	10.7	57.7	16.8	8.1	19.3	2.5	29.4
KOH 1/0-12	1/0	50	1/2"	10.2	13.2	71.6	19.3	11.9	27.9	3.0	36.6
KOH 2/0-12	2/0	70	1/2"	11.4	14.7	79.2	21.6	12.7	28.7	3.3	38.1
KOH 3/0-12	3/0	95	1/2"	12.9	16.3	79.8	24.4	12.7	28.7	3.3	38.1
KOH 4/0-12	4/0	-	1/2"	14.7	18.0	82.3	26.9	12.7	28.7	3.6	39.6
KOH 250-16	250	120	1/2"	16.0	19.6	85.3	29.7	12.7	28.7	3.6	40.9
KOH 300-12	300	150	1/2"	16.5	20.6	99.3	30.2	13.4	29.4	4.3	52.0
KOH 350-12	350	-	1/2"	17.8	22.4	99.3	32.5	13.5	29.5	4.8	52.0
KOH 400-16	400	185	5/8"	19.3	24.1	105.2	35.8	16.8	34.3	4.8	55.1
KOH 500-16	500	240	5/8"	21.3	26.9	114.3	38.9	16.8	38.1	5.6	58.4
KOH 600-16	600	300	5/8"	23.4	30.2	129.8	42.9	22.4	44.8	7.1	67.8
KOH 750-16	750	-	5/8"	26.2	33.0	144.0	44.5	22.4	49.3	7.1	73.2
KOH 800-16	800	400	5/8"	26.7	34.3	144.0	48.0	22.4	49.3	7.4	73.2
KOH 1000-16	1000	500	5/8"	29.7	38.1	158.2	54.8	24.6	54.9	8.6	76.0

Material
One piece seamless, high conductivity pure electrolytic copper and tin plated

Tested Standard
IEC 62561 Part 1
TIS 3024 Part 1
UL 486
NEMA CC1

Application
Long Barrel lugs are usable with high voltage up to 35 kV
Suitable for grounding and lightning protection system

Copper Lugs



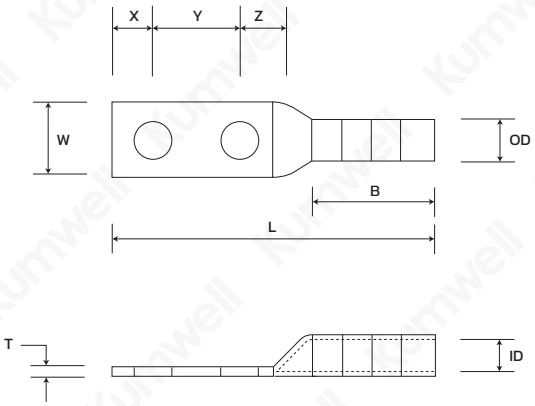

UL LISTED

2-Hole Copper Lugs

Code No.	Copper Conductor AWG/MCM	Copper Conductor mm²	Stud Size	Dimensions (mm.) I.D	O.D	L	W	X	Y	Z	T	B
KTH 8-6 DN	8	-	1/4"	4.6	7.1	54.9	10.9	6.4	16.0	9.4	2.5	18.0
KTH 6-6 DN	6	16	1/4"	5.6	7.9	65.0	12.2	6.4	16.0	9.4	2.0	27.2
KTH 4-6 DN	4	25	1/4"	7.1	9.7	65.5	14.0	6.4	16.0	9.4	2.3	27.2
KTH 2-8 DN	2	35	5/16"	7.9	10.7	76.7	16.8	9.1	19.1	11.2	2.5	29.5
KTH 1/0-12 DN	1/0	50	1/2"	10.2	13.2	124.5	19.3	16.0	44.5	16.0	3.0	36.6
KTH 2/0-12 DN	2/0	70	1/2"	11.4	14.7	126.5	21.6	16.0	44.5	16.0	3.3	38.1
KTH 3/0-12 DN	3/0	95	1/2"	12.9	16.3	126.5	24.4	16.0	44.5	16.0	3.3	38.1
KTH 4/0-12 DN	4/0	-	1/2"	14.7	18.0	130.3	26.9	16.0	44.5	16.0	3.6	39.6
KTH 250-12 DN	250	120	1/2"	16.0	19.6	132.8	29.7	16.0	44.5	16.0	3.6	40.9
KTH 300-12 DN	300	150	1/2"	16.5	20.6	147.3	30.2	16.0	44.5	16.0	4.8	52.1
KTH 350-12 DN	350	-	1/2"	17.8	22.4	147.3	32.5	16.0	44.5	19.1	4.8	52.1
KTH 400-12 DN	400	185	1/2"	19.3	24.1	153.7	35.8	16.0	44.5	19.1	4.8	55.1
KTH 500-12 DN	500	240	1/2"	21.3	26.9	155.2	38.9	16.0	44.5	19.1	5.6	58.4
KTH 600-12 DN	600	300	1/2"	23.4	30.2	172.0	42.9	16.0	44.5	19.1	7.1	67.8
KTH 750-12 DN	750	-	1/2"	26.2	33.0	179.1	44.5	16.0	44.5	19.1	7.1	73.2
KTH 800-12 DN	800	400	1/2"	26.7	34.3	179.1	48.0	16.0	44.5	19.1	7.4	73.2
KTH 1000-12 DN	1000	500	1/2"	29.7	38.1	184.4	54.9	16.0	44.5	19.1	8.6	76.0

Material
One piece seamless, high conductivity pure electrolytic copper and tin plated

Tested Standard
IEC 62561 Part 1
TIS 3024 Part 1
UL 486
NEMA CC1

Application
Long Barrel lugs are usable with high voltage up to 35 kV
Suitable for grounding and lightning protection system

Certified Mark
UL Listed

Copper Lugs



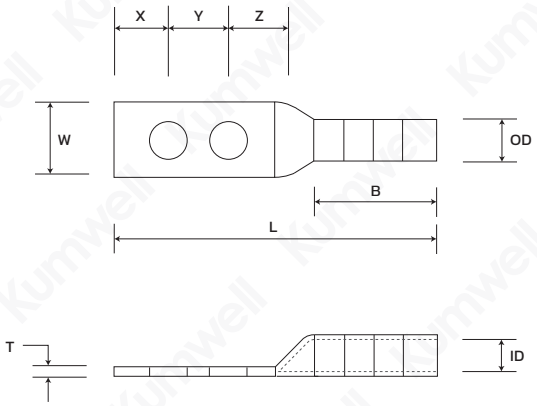

2-Hole Copper Lugs

Code No.	Copper Conductor		Stud Size	Dimensions (mm.)								
	AWG/MCM	mm²		I.D	O.D	L	W	X	Y	Z	T	B
KTH 8-6 C	8	-	1/4"	4.6	7.1	54.9	10.9	6.4	20.0	9.4	2.5	14.0
KTH 6-6 C	6	16	1/4"	5.6	8.6	69.0	14.9	9.9	20.0	9.9	2.0	17.0
KTH 6-8 C	6	16	5/16"	5.6	8.6	69.0	14.9	9.9	20.0	9.9	2.0	17.0
KTH 4-8 C	4	25	5/16"	7.1	9.7	69.0	14.9	9.9	20.0	9.9	2.3	22.9
KTH 2-8 C	2	35	5/16"	7.9	10.7	76.7	16.8	9.1	20.0	11.2	2.5	28.7

Material
One piece seamless, high conductivity pure electrolytic copper and tin plated

Tested Standard
IEC 62561 Part 1
TIS 3024 Part 1

Application
Long Barrel lugs are usable with high voltage up to 35 kV
Suitable for grounding and lightning protection system

Copper Lugs



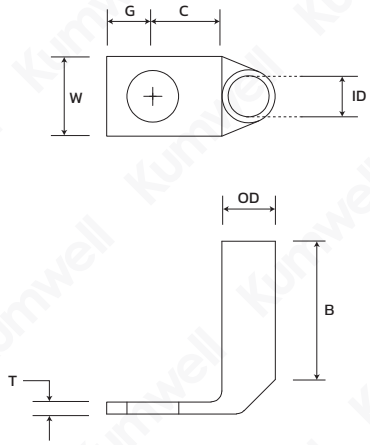

Copper Lugs One-Hole Long Barrel 90° Pad

Code No.	Copper Conductor AWG/MCM	Copper Conductor mm²	Stud Size	Dimensions (mm.) I.D	O.D	W	G	C	T	B
KOHL 8-6	8	-	1/4"	4.6	7.1	10.9	6.4	9.4	2.5	18.0
KOHL 6-6	6	16	1/4"	5.6	7.9	12.2	6.4	9.4	2.0	27.2
KOHL 4-6	4	25	1/4"	7.1	9.7	14.0	6.4	9.4	2.3	27.2
KOHL 2-8	2	35	5/16"	7.9	10.7	16.8	8.1	11.2	2.5	29.5
KOHL 1/0-12	1/0	50	1/2"	10.2	13.2	19.3	11.9	16.0	3.0	36.6
KOHL 2/0-12	2/0	70	1/2"	11.4	14.7	21.6	12.7	16.0	3.3	38.1
KOHL 3/0-12	3/0	95	1/2"	13.0	16.3	24.4	12.7	16.0	3.3	38.1
KOHL 4/0-12	4/0	-	1/2"	14.7	18.0	26.9	12.7	16.0	3.6	39.6
KOHL 250-12	250	120	1/2"	16.0	19.6	29.7	16.0	16.0	3.6	40.9
KOHL 300-12	300	150	1/2"	16.5	20.6	30.2	16.0	16.0	4.8	52.1
KOHL 350-12	350	-	1/2"	17.8	22.4	32.5	16.0	16.0	4.8	52.1
KOHL 400-16	400	185	5/8"	19.3	24.1	35.8	16.8	17.5	4.8	55.1
KOHL 500-16	500	240	5/8"	21.3	26.9	38.9	16.8	21.3	5.6	58.4
KOHL 600-16	600	300	5/8"	23.4	30.2	42.9	22.4	22.4	7.1	67.8
KOHL 750-16	750	-	5/8"	26.2	33.0	44.5	22.4	26.9	7.1	73.2
KOHL 800-16	800	400	5/8"	26.7	34.3	48.0	22.4	26.9	7.4	73.2
KOHL 1000-16	1000	500	5/8"	29.7	38.1	54.9	24.6	30.2	8.6	76.0

Material
One piece seamless, high conductivity pure electrolytic copper and tin plated

Tested Standard
IEC 62561 Part 1
TIS 3024 Part 1
UL 486
NEMA CC1

Application
Long Barrel lugs are usable with high voltage up to 35 kV
Suitable for grounding and lightning protection system

Copper Lugs



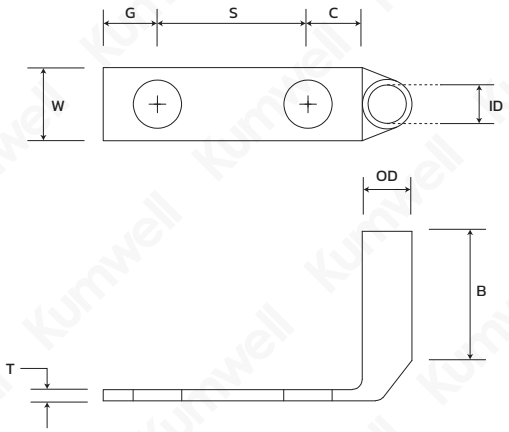

Copper Lugs Two-Hole Long Barrel 90° Pad

Code No.	Copper Conductor		Stud Size	Dimensions (mm.)							
	AWG/MCM	mm²		I.D	O.D	W	G	S	C	T	B
KTHL 8-6 DN	8	-	1/4"	4.6	7.1	10.9	6.4	16.0	9.4	2.5	18.0
KTHL 6-6 DN	6	16	1/4"	5.6	7.9	12.2	6.4	16.0	9.4	2.0	27.2
KTHL 4-6 DN	4	25	1/4"	7.1	9.7	14.0	6.4	16.0	9.6	2.3	27.2
KTHL 2-8 DN	2	35	5/16"	7.9	10.7	16.7	9.1	19.1	11.2	2.5	29.5
KTHL 1/0-12 DN	1/0	50	1/2"	10.2	13.2	19.3	16.0	44.5	16.0	3.0	36.6
KTHL 2/0-12 DN	2/0	70	1/2"	11.4	14.7	21.6	16.0	44.5	16.0	3.3	38.0
KTHL 3/0-12 DN	3/0	95	1/2"	13.0	16.3	24.4	16.0	44.5	16.0	3.3	38.0
KTHL 4/0-12 DN	4/0	-	1/2"	14.7	18.0	26.9	16.0	44.5	16.0	3.6	39.6
KTHL 250-12 DN	250	120	1/2"	16.0	19.6	29.7	16.0	44.5	16.0	3.6	40.9
KTHL 300-12 DN	300	150	1/2"	16.5	20.6	30.2	16.0	44.5	16.0	4.8	52.1
KTHL 350-12 DN	350	-	1/2"	17.8	22.4	35.5	16.0	44.5	19.1	4.8	52.1
KTHL 400-12 DN	400	185	1/2"	19.3	24.1	35.8	16.0	44.5	19.1	4.8	55.1
KTHL 500-12 DN	500	240	1/2"	21.3	26.9	38.8	16.0	44.5	19.1	5.6	58.4
KTHL 600-12 DN	600	300	1/2"	23.4	30.2	42.9	16.0	44.5	19.1	7.1	67.8
KTHL 750-12 DN	750	-	1/2"	26.2	33.0	44.5	16.0	44.5	19.1	7.1	73.2
KTHL 800-12 DN	800	400	1/2"	26.7	34.3	48.0	16.0	44.5	19.1	7.4	73.2
KTHL 1000-12 DN	1000	500	1/2"	29.7	38.1	54.9	16.0	44.5	19.1	8.3	76.0

Material
One piece seamless, high conductivity pure electrolytic copper and tin plated

Tested Standard
IEC 62561 Part 1
TIS 3024 Part 1
UL 486
NEMA CC1

Application
Long Barrel lugs are usable with high voltage up to 35 kV
Suitable for grounding and lightning protection system

Copper Lugs



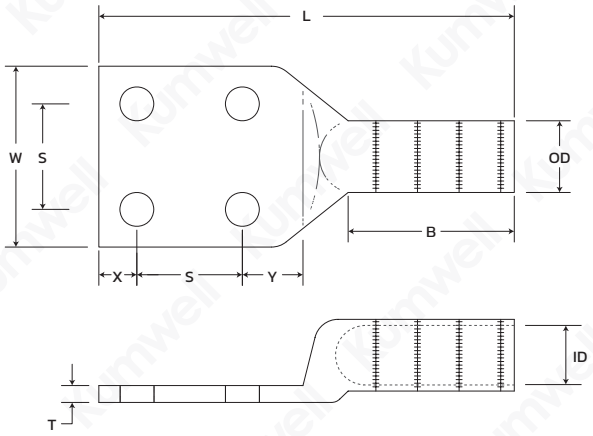

4 - Hole Copper Lugs

Code No.	Copper Conductor MCM	Copper Conductor mm²	Stud Size	Dimensions (mm.) I.D	O.D	L	W	X	S	Y	T	B	Weight (kg)
KFH 250-12N	250	120	1/2"	16.0	19.6	132.9	76.2	16.0	44.5	19.1	3.6	40.9	0.26
KFH 300-12N	300	150	1/2"	16.5	20.6	147.3	76.2	16.0	44.5	19.1	4.8	52.1	0.37
KFH 350-12N	350	-	1/2"	17.8	22.4	147.3	76.2	16.0	44.5	19.1	4.8	52.1	0.38
KFH 400-12N	400	185	1/2"	19.3	24.1	153.7	76.2	16.0	44.5	19.1	4.8	55.1	0.39
KFH 500-12N	500	240	1/2"	21.3	26.9	155.2	76.2	16.0	44.5	19.1	5.6	58.4	0.48
KFH 600-12N	600	300	1/2"	23.4	30.2	172.0	76.2	16.0	44.5	19.1	7.1	67.8	0.69
KFH 750-12N	750	-	1/2"	26.2	33.0	179.1	76.2	16.0	44.5	19.1	7.1	73.2	0.71
KFH 800-12N	800	400	1/2"	26.7	34.3	179.1	76.2	16.0	44.5	19.1	7.4	73.2	0.83
KFH 1000-12N	1000	500	1/2"	29.7	38.1	184.2	76.2	16.0	44.5	19.1	8.6	75.7	0.92
KFH 1250-12N	1250	630	1/2"	33.0	42.7	190.5	76.2	16.0	44.5	19.1	10.2	81.0	1.22
KFH 1500-12N	1500	-	1/2"	36.6	47.0	190.5	76.2	16.0	44.5	19.1	10.2	81.0	1.30
KFH 2000-12N	2000	1000	1/2"	42.4	54.4	207.3	77.7	16.0	44.5	19.1	11.7	87.4	1.66

Material
One piece seamless, high conductivity pure electrolytic copper and tin plated

Tested Standard
IEC 62561 Part 1
TIS 3024 Part 1
UL 486
NEMA CC1

Application
Long Barrel lugs are usable with high voltage up to 35 kV
Suitable for grounding and lightning protection system

Copper Lugs



UL LISTED
TERMINAL CONNECTOR
3RC9

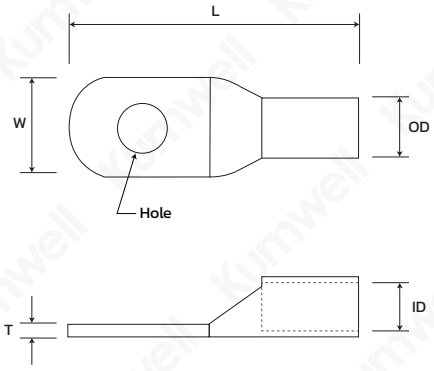

Code No.	Cable (mm²)	Hole (mm)	Dimensions (mm) I.D	O.D	L	W	T	Weight (kg)
KOL 10-6	10	6.4	4.5	6.2	25	10.0	1.5	0.002
KOL 10-8	10	8.4	4.5	6.2	25	12.6	1.5	0.002
KOL 16-6	16	6.4	5.4	7.1	30	10.0	1.5	0.01
KOL 16-8	16	8.4	5.4	7.1	30	12.6	1.5	0.01
KOL 25-6	25	6.4	6.8	8.8	30	12.6	1.5	0.01
KOL 25-8	25	8.4	6.8	8.8	30	12.6	1.5	0.01
KOL 25-10	25	10.5	6.8	8.8	31	15.0	1.5	0.01
KOL 35-6	35	6.4	8.2	10.6	35	15.0	2.5	0.01
KOL 35-8	35	8.4	8.2	10.6	35	15.0	2.5	0.01
KOL 35-10	35	10.5	8.2	10.6	35	15.0	2.5	0.01
KOL 35-12	35	13	8.2	10.6	35	18.6	2.5	0.01
KOL 50-8	50	8.4	9.5	12.4	43	18.0	3.0	0.02
KOL 50-10	50	10.5	9.5	12.4	43	18.0	3.0	0.02
KOL 50-12	50	13	9.5	12.4	43	19.0	3.0	0.02
KOL 70-8	70	8.4	11.2	14.7	50	21.0	3.4	0.03
KOL 70-10	70	10.5	11.2	14.7	50	21.0	3.4	0.03
KOL 70-12	70	13	11.2	14.7	50	21.0	3.4	0.03
KOL 95-8	95	8.4	13.5	17.4	55	25.5	3.4	0.04
KOL 95-10	95	10.5	13.5	17.4	55	25.5	3.4	0.04
KOL 95-12	95	13	13.5	17.4	55	25.5	3.4	0.04
KOL 120-10	120	10.5	15	19.4	60	28.0	4.0	0.06
KOL 120-12	120	13	15	19.4	60	28.0	4.0	0.06
KOL 120-14	120	15	15	19.4	60	28.0	4.0	0.06
KOL 120-16	120	17	15	19.4	60	28.0	4.0	0.06
KOL 150-10	150	10.5	16.5	21.2	69	30.5	4.0	0.08
KOL 150-12	150	13	16.5	21.2	69	30.5	4.0	0.08
KOL 150-14	150	15	16.5	21.2	69	30.5	4.0	0.08
KOL 150-16	150	17	16.5	21.2	69	30.5	4.0	0.08
KOL 185-12	185	13	18.5	23.5	78	34.0	4.5	0.10
KOL 185-14	185	15	18.5	23.5	78	34.0	4.5	0.10
KOL 185-16	185	17	18.5	23.5	78	34.0	4.5	0.09
KOL 240-12	240	13	21	26.5	92	38.5	5.5	0.16
KOL 240-14	240	15	21	26.5	92	38.5	5.5	0.16
KOL 240-16	240	17	21	26.5	92	38.5	5.5	0.17
KOL 240-18	240	19	21	26.5	92	38.5	5.5	0.17
KOL 300-12	300	13	23.5	30.0	101	43.5	6.5	0.23
KOL 300-14	300	15	23.5	30.0	101	43.5	6.5	0.23
KOL 300-16	300	17	23.5	30.0	101	43.5	6.5	0.23
KOL 300-18	300	19	23.5	30.0	101	43.5	6.5	0.23
KOL 400-14	400	15	28.5	36.5	114	53.0	7.5	0.40
KOL 400-16	400	17	28.5	36.5	114	53.0	7.5	0.40
KOL 400-18	400	19	28.5	36.5	114	53.0	7.5	0.39
KOL 400-20	400	21	28.5	36.5	114	53.0	7.5	0.39
KOL 500-14	500	15	29.7	38.1	124	56.0	8.5	0.46
KOL 500-16	500	17	29.7	38.1	124	56.0	8.5	0.46
KOL 500-18	500	19	29.7	38.1	124	56.0	8.5	0.45
KOL 500-20	500	21	29.7	38.1	124	56.0	8.5	0.45

Material
One piece seamless, high conductivity pure electrolytic copper and tin plated

Tested Standard
IEC 62561 Part 1
TIS 3024 Part 1
UL 486
NEMA CC1

Application
These terminals are designed for low voltage up to 600V
Suitable for grounding and lightning protection system

Certified Mark
UL Listed

Copper C-Clamp







UL LISTED
GROUND CLAMP
32 UG

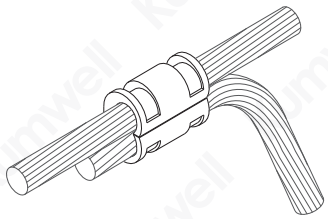

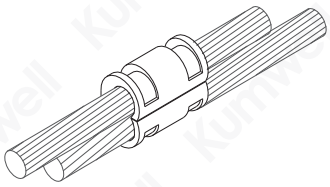

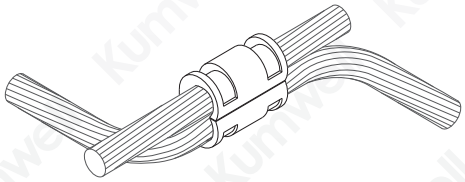

Code No.	Cable Size (mm²) Run	Tap	Weight (kg)	Hydraulic crimping tools HCT-S1	HCT-M1	HCT-P1
CCC 6-6	6-2.5	6-1.5	0.01	-	-	-
CCC 10-10	10	10-1.5	0.01	MC 10	MC 10	-
CCC 16-16	16	16-1.5	0.02	MC 25	MC 25	-
CCC 25-10	25	10-1.5	0.02	MC 25	MC 25	-
* CCC 25-25	25	25-10	0.02	MC 25	MC 25	-
CCC 35-16	35	16-1.5	0.04	MC 35	MC 35	-
* CCC 35-35	35	35-10	0.04	MC 35	MC 35	-
CCC 50-25	50	25-4	0.08	MC 70	MC 70	-
* CCC 50-50	50	50-35	0.09	MC 70	MC 70	-
CCC 70-35	70	35-4	0.08	MC 70	MC 70	-
* CCC 70-70	70	70-35	0.08	MC 70	MC 70	-
CCC 95-35	95	35-4	0.13	-	MC 95	MC 95
* CCC 95-95	95	95-50	0.12	-	MC 95	MC 95
* CCC 120-120	120	120-25	0.17	-	MC 185	MC 185
* CCC 150-150	150	150-25	0.13	-	MC 185	MC 185
* CCC 185-95	185	95-25	0.13	-	MC 185	MC 185
CCC 185-185	185	185-120	0.23	-	-	MC 300
CCC 240-70	240	70-35	0.22	-	-	MC 300
CCC 240-120	240	120-95	0.24	-	-	MC 300
CCC 240-240	240	240-120	0.32	-	-	MC 300
CCC 300-300	300	300-120	0.28	-	-	MC 300

Material
High purity copper profiles

Application
Suitable for copper cable connection in grounding and lightning protection by using hydraulic crimping tools, HCT-S1, HCT-M1 and HCT-P1

Tested Standard
IEC 62561 Part 1
TIS 3024 Part 1
UL 467

Certified Mark
UL Listed

Note : " * " means certified UL Listed

Copper C-Clamp With Tin









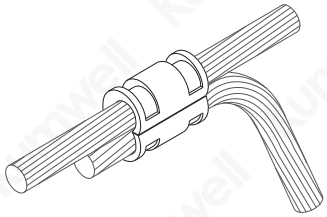

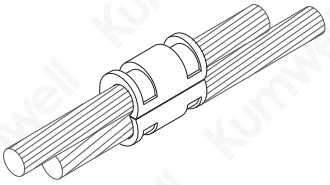

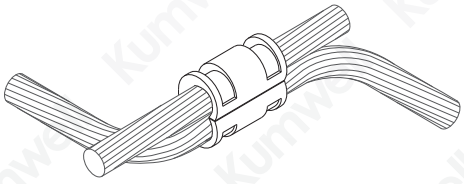

Code No.	Cable Size (mm²) Run	Tap	Weight (kg)	Hydraulic crimping tools HCT-S1	HCT-M1	HCT-P1
CCC 6-6T	6-2.5	6-1.5	0.01	-	-	-
CCC 10-10T	10	10-1.5	0.01	MC 10	MC 10	-
CCC 16-16T	16	16-1.5	0.02	MC 25	MC 25	-
CCC 25-10T	25	10-1.5	0.02	MC 25	MC 25	-
CCC 25-25T	25	25-10	0.02	MC 25	MC 25	-
CCC 35-16T	35	16-1.5	0.04	MC 35	MC 35	-
CCC 35-35T	35	35-10	0.04	MC 35	MC 35	-
CCC 50-25T	50	25-4	0.08	MC 70	MC 70	-
CCC 50-50T	50	50-35	0.09	MC 70	MC 70	-
CCC 70-35T	70	35-4	0.08	MC 70	MC 70	-
CCC 70-70T	70	70-35	0.08	MC 70	MC 70	-
CCC 95-35T	95	35-4	0.13	-	MC 95	MC 95
CCC 95-95T	95	95-50	0.12	-	MC 95	MC 95
CCC 120-120T	120	120-25	0.17	-	MC 185	MC 185
CCC 150-150T	150	150-25	0.13	-	MC 185	MC 185
CCC 185-95T	185	95-25	0.13	-	MC 185	MC 185
CCC 185-185T	185	185-120	0.23	-	-	MC 300
CCC 240-70T	240	70-35	0.22	-	-	MC 300
CCC 240-120T	240	120-95	0.24	-	-	MC 300
CCC 240-240T	240	240-120	0.32	-	-	MC 300
CCC 300-300T	300	300-120	0.28	-	-	MC 300

Material
High purity copper profiles and tin plated.

Tested Standard
IEC 62561 Part 1
TIS 3024 Part 1

Application
Suitable for copper cable connection in grounding and lightning protection by using hydraulic crimping tools, HCT-S1, HCT-M1 and HCT-P1

Hydraulic Crimping Tool

HCT-S1







Hexagon die | Round die

HCT-S1 Hydraulic Crimping Tool with interchangeable die is suitable for compression of electrical connector on copper or aluminium lug and C-Clamp with 180 degree fully rotated tool head.

Specification
Crimping force 60 KN
Stroke 17 mm
Length 460 mm
Weight 3.3 kg

Application
Copper Lugs size 10-300 mm2
C-Clamp Code no. CCC 10-10 to CCC 70-70

HCT-M1



HCT-M1 Hydraulic Crimping Tool with interchangeable die is suitable for compression of electrical connector on copper or aluminum lug and C-Clamp with 180 degree fully rotated tool head. The double speed action provides a fast advance speed for rapid approach of the dies to the connector and a lower more powerful speed for crimping.

Specification
Crimping force 120 KN
Stroke 42 mm
Length 550 mm
Weight 7.0 kg

Application
Copper Lugs size 10-400 mm²
C-Clamp Code no. CCC 10-10 to CCC 185-95

HCT-P1



HCT-P1 Hydraulic Pump Set is suitable for electrical connector and a die for connector copper or aluminium lug and C-Clamp in advance operation and no electricity. Oil can be releasedquickly with 2 stages of high and low pressure which are available besides quick coupling.

Specification
Crimping force 540 KN
Stroke 28 mm
Length 380 mm
Weight 43.4 kg
Hydraulic pump 11.4 kg
Crimping tool 32 kg

Application
Copper Lugs size 400-1000 mm²
C-Clamp Code no. CCC 95-35 to CCC 300-300

Innovation

Smart Lightning Management System

The innovative intelligent system by Kumwell providing the smart monitoring and overview real-time reporting on the status of installed systems in your area i.e. lightning protection system, grounding and surge protection system etc. Smart Lightning Management system could promptly alarm on a dangerous threat by lightning and electromagnetic fields providing safety to every life in the working area and public places and reducing risk of damage to property, buildings, communication failure and any management system.

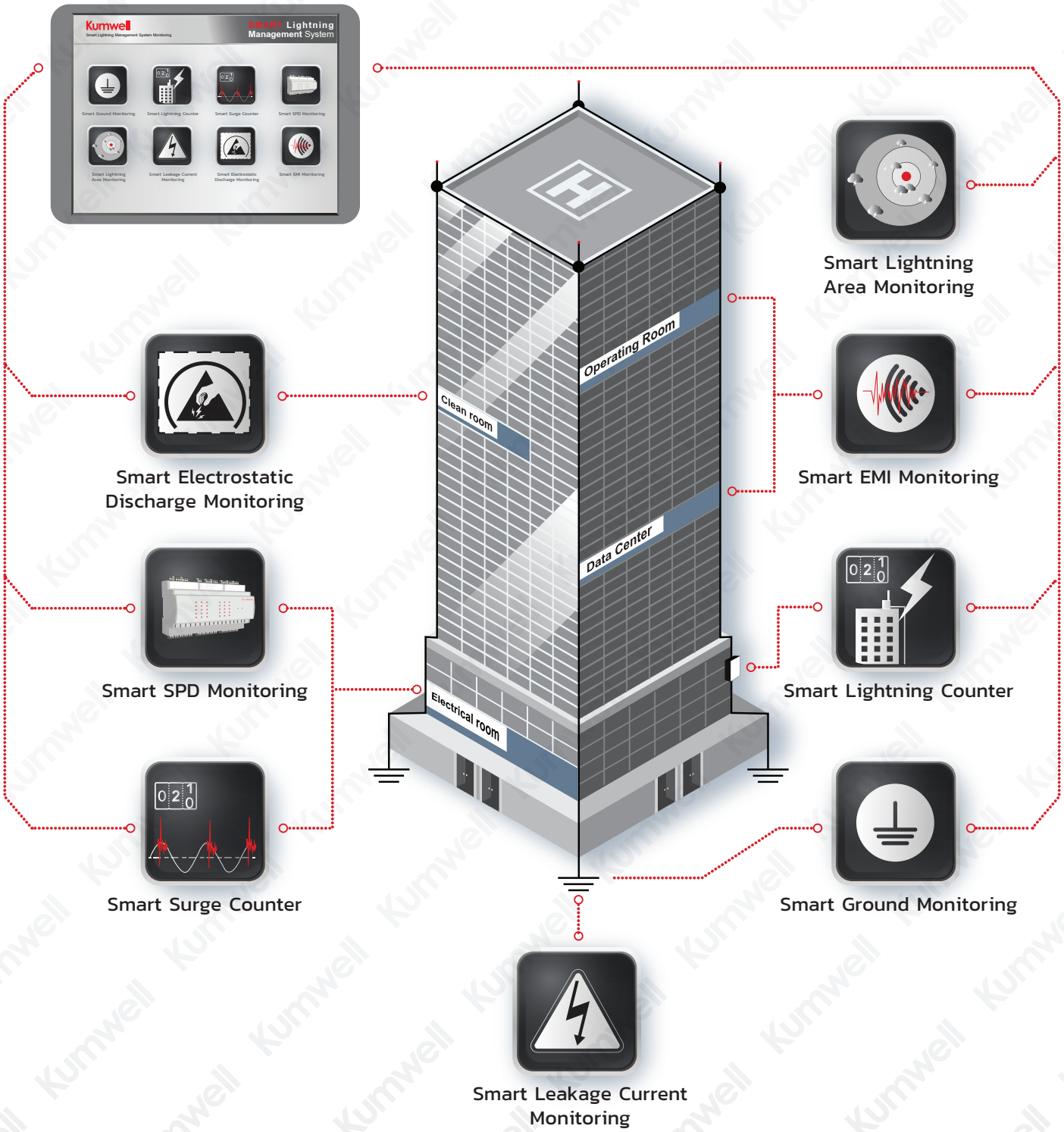

Innovation



Smart Lightning Management System (SLMS)

Is a smart innovation that can monitor the statuses of lightning protection, grounding and surge protection system. It can immediately notify electromagnetic and lightning threats providing securities and reducing losses to assets, properties, communication and operation systems. All data will be transferred to the administrator or central system to monitor, analyze and assess proactive lightning protection maintenance plans. Thus, the system can stand by for any critical situation.

SMART
instantaneous alerts threat preventing danger and damage from lightning strikes and electromagnetic fields

SAFETY
increases protection to individuals and public spaces

SECURITY
ensures electrical and communication operations at any time

SAVING
reduces harm to properties, electrical, communication, and operation systems

Innovation

System Architecture

Smart Lightning Management Systems

(Local & Network Monitoring : IOT)



Innovation

Smart Devices Specification

SMART GROUND MONITORING



Use the calculation from the ground loop resistance to provide real-time checking for any false in the grounding system thus able to detect and activate alarm function when the value setting of the grounding change.

Specification

Power Supply	: 220-240 VAC
Resistance Range	: 0.01 - 200 Ω
Alarm Indication	: Detector audible and visual alarm
Data Display Mode	: 4 digits LCD direct indication
Degree of protection	: IP54
Communication mode	: RS485

SMART LIGHTNING COUNTER



Is designed to count and stored logs the lightning strike incident of date, time, the number of strike and measure the current flow through the lightning protection system.

Specification

Operating voltage	: 12 VDC
Triggering value	: 1 kA (8/20 µs)
Max. measuring current	: 40 kA (10/350 µs)
Lightning current record	: EEPROM storage
Degree of protection	: IP20
Mounting	: DIN rail 35mm
Communication mode	: RS485

SMART SURGE COUNTER



Is designed to count and stored logs of surge incidents which pass through the electrical and electronic system. Enabling the surge protective devices maintenance planning and always keep the surge protective devices in good condition.

Specification

Rated operating voltage	: 85-265 VAC
Threshold current	: 1 kA (8/20 µs)
Max. counting discharge current	: 100 kA (8/20 µs)
Indicator	: 2-Digits
Degree of protection	: IP20
Mounting	: DIN rail 35mm
Communication mode	: RS485

SMART SPD MONITORING

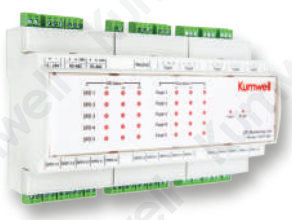

Help enable more accurate devices evaluation by monitor and update life-status the working condition of the surge protective devices and fuse.

Specification

Operating voltage	: 9-24 VDC
SPD remote contacts switching capacity input	: AC: 250V/0.5A DC: 250V/0.1A 125V/0.2A 75V/0.5A
Indication	: Status LED
Communication mode	: RS485

Innovation

Smart Devices Specification

SMART LIGHTNING AREA MONITORING

Detect and record lightning strokes within the area of concern (AOC) by obtain high accuracy lightning data from Kumwell Lightning Detection System



Specification

- Indicate the lightning data around radius.
- Alert when a lightning (Cloud to Ground) happened in the monitored area.
- Can view the lightning data report at the monitored area.

SMART LEAKAGE CURRENT MONITORING

Real-time leakage current monitoring, possible to tracking the variation of leakage. Alert when the leakage current exceed the limit.



Specification

Power supply	: Adaptor DC12V/2A
CT Caliber	: Ø 40 mm
Current Range	: 0.00mA ~ 60.00A AC
Current Resolution	: Min 0.01 mA AC
Current Accuracy	: ± 2%rdg ± 5dgt
Communication mode	: RS485

SMART ELECTROSTATIC DISCHARGE MONITORING

Monitor the electrostatic discharges. This is important for preventing damage in hazardous area such as oil and gas tank and pipeline that are flammable and explosive.



Specification

Power supply	: 9 VDC
Measurement range	: AUTO: 0 to ±1.49 kV (low range); ±1.0 kV to ±30.0 kV (hi range) Hi Range: 0 to ±30.0 kV Low Range: 0 to ±3.00 kV Ion Balance: 0 to ±300V
Distance	: 25 mm ±0.5 mm; LEDs guide for correct distance
Communication mode	: RS485

SMART EMI MONITORING

Monitor the electromagnetic field (EMF), electric field (EF) and radio frequency power (RF) and alarm when there is an interference exceed the limit.



Specification

Power Supply	: 12 V DC
EMF measurement range	: 0.00 to 500 mG, 0.00 to 50 µT RF Frequency up to 10 GHz
EF measurement range	: 0 V/m to 1000 V/m Frequency independent
RF measurement	: 0.02 µW/m² to 9999 mW/m² Frequency up to 10 GHz
Communication	: RS485

Innovation

Project Reference

Arena / Stadium

PTT Stadium (located in Huai Pong, Mueang Rayong District, Rayong) gets positive feedback from fans due to its shady atmosphere, international grass usage and immense 16,000-seat capacity. Nonetheless, its massive size makes it more vulnerable to lightning than typical buildings. Therefore, a lightning protection system is advised to reduce lightning disasters, which can crucially hurt the organization's image.





Kumwell Corporation PLC. participated in designing and installing the Lightning Protection System, Lightning Warning System and Smart Lightning Management System of PTT Stadium. The Smart Lightning Management system consists of Smart Ground Monitoring, Smart Lightning Counter, and Smart Surge Counter to track grounding system, log lightning surge, and more. The goal is to deliver stability and safety to users and the stadium's infrastructure.



Innovation

Project Reference

Pipeline Industrial

The natural gas pipeline project from block valve station from Ratchaburi-Wang Noi 6 (RA6) is a project under TIEB (Thailand Integrated Energy Blueprint) plan assigning PTT to be responsible for national energy security. The project aims to distribute east natural gas to the west to create national gas distribution stability and supply industries usage by connecting distribution from Sai Noi, Nonthaburi, to Chom Bueng, Ratchaburi.



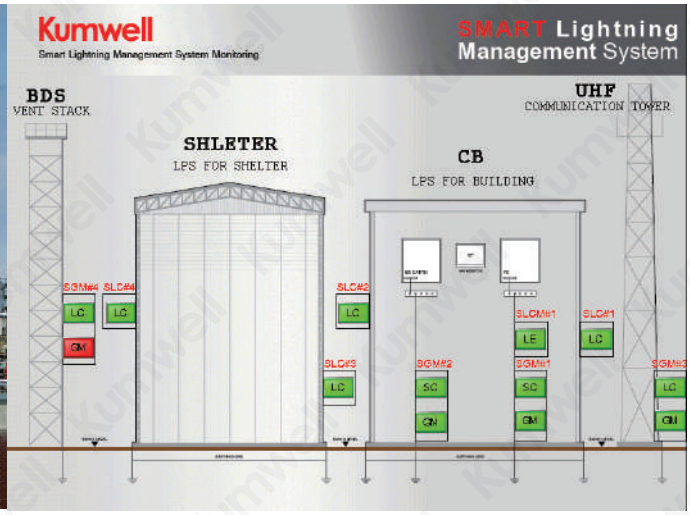

Kumwell Corporation PLC. participated in Smart Lightning Management System design and installation. The block valve station installed Smart Grounding Monitoring, Smart Surge counter, Smart Lightning Counter, Smart Leakage Current Monitoring, and more to bring value and safety to operational personnel and infrastructures.



References

Owner	Project Name	Distributor	Period
Thailand	● South Bangkok Combined Cycle Power Plant	Sino - Thai Engineering & Construction Co.,Ltd	2009
	● 500 Kv Gis At On Nuch Substation Under Bluk Power Supply For The Greater Bangkok Area Phase 2	Sri-u-thong Co.,Ltd.	2009
	● Mitr Phuluang Sugar Mils At Loei	K.M.L. International Co.,Ltd	2012
	● Belle Condominium	K.M.L. International Co.,Ltd	2012
	● Chana Power Plant	K.M.L. International Co.,Ltd	2012
	● Wangnoi Power Plant	K.M.L. International Co.,Ltd	2012
	● Lopburi Solar Power Plant	K.M.L. International Co.,Ltd	2012
	● Tot 3 G	K.M.L. International Co.,Ltd	2012
	● Bang Pa - In Power Plant	K.M.L. International Co.,Ltd	2012
	● Nongsang Power Plant	K.M.L. International Co.,Ltd	2012
	● Central Plaza Suratthani	K.M.L. International Co.,Ltd	2012
	● Amata B - Grimm At Rayong	K.M.L. International Co.,Ltd	2012
	● Boonthavorn Rama Ii	K.M.L. International Co.,Ltd	2012
	● Solar Thermal Power Plant At Kanchanaburi	K.M.L. International Co.,Ltd	2012
	● Hatyai Submarine Cable	K.M.L. International Co.,Ltd	2012
	● 115 Kv Bang Pa - In 2 - Ayutthaya 1	K.M.L. International Co.,Ltd	2012
	● P/j The Siam On The River Hotel	K.M.L. International Co.,Ltd	2012
	● 115 Kv, Xekong Ss&xekhamane3 - Xekong Tl, Laos	K.M.L. International Co.,Ltd	2012
	● Bang Pa - In Solar Plant	K.M.L. International Co.,Ltd	2012
	● Ubonratchathani Bioeternal Substation	K.M.L. International Co.,Ltd	2012
	● The International Convention And Exhibition Center Commemorating His Majesty's 7 Ht Cycle Birthday Anniversary	K.M.L. International Co.,Ltd	2012
	● Central Rama 9	K.M.L. International Co.,Ltd	2012
	● Central Festival Samul	Elmec Engineering Co.,Ltd	2013
	● S One Perspective Department Store At Kadrincome	Precise Corporation Co.,Ltd	2013
	● Boonthavorn Rama 2	Secco Co.,Ltd	2013
	● Mrta Purple Line	Sino - Thai Engineering & Construction Co.,Ltd	2013
	● Central Hatyai Project	205 Engineering Co.,Ltd	2013
	● Phuket Airport Deverlopment Project	Sino - Thai Engineering & Construction Co.,Ltd	2013
	● Solar Power Plant Nakhonsawan	Aod Supply Co.,Ltd	2013
	● Nong Sang Power Plant Nakhonsawan	Sino - Thai Engineering & Construction Co.,Ltd	2013
	● Kanom Power Substation	Siemens Co.,Ltd	2013
	● Tesco Lotus Rdc	Prosper Engineering Co.,Ltd	2013
	● Bts Bangwa Station	Suvis Co.,Ltdsiemens Co.,Ltd	2013
	● Chana Power Plant Development	Siemens Co.,Ltd	2013
EGAT	● Lam Takong Wind Turbine Generation	Hydrochina Corporation	2017
	● 230 Kv Ayutthaya 4 - Sikhiu 2	C.H.C. Engineering	2017
	● 230kv Mae Moh, Pha Yao	Globaltronic Intertrade Co., Ltd.	2017
	● 500kv Tha Tako Substation Expansion	Sri U-thong Co., Ltd.	2017
	● Mae Moh Generation Plant	Globaltronic Intertrade Co., Ltd.	2017
	● Transmission Lines 115 Kv Nakhon Phanom - Sakon Nakhon 2	Sri U-thong	2017
	● Transmission Lines115 Kv Amnat Charoen Mukdahan	Sri U-thong	2017
	● 115kv Substation Lan Krabu - Phisanulok	Loxley Power System Co., Ltd.	2017
	● Transmission System Expansion And Renovation Projcet Phase 2	Kinden	2017
	● Fire Protection System Phase 3	Kinden	2017

Remark : The aforementioned project is some of the domestic project references

References

Owner	Project Name	Distributor	Period
EGAT	● T2 Wind Farm	Italthai Engineering	2017
	● T3 Wind Farm	Italthai Engineering	2017
	● Solar Farm	Tns Instrument And Engineering Co., Ltd.	2017
Ramathibodi Hospital	● Ramathibodi Hospital Rama 6 Building	P. S. Power Lines Company Limited	2017
Genesis	● Genesis Data Center	Prosper Engineering	2017
PTT	● Ptt Khao Hin Son, Chachoeng Sao	Rk3 Engineering & Development	2017
	● Ptt Lng	Royaltec International	2017
Cambodia	● Celti 150mw Coal Power Plant, Si Hanoukville	Globaltronic Intertrade	2017
AOT	● Suvarnapbhumi Airport	Italian-thai Development	2017
EGCO	● Rayong Generation Plant, Amata City	Globaltronic Intertrade	2017
Malaysia	● Scc Rapid (Petronas)	Royaltec International	2017
PEA	● 8.965mw Vspp-pea	Italthai Engineering	2017
	● Bang Phai Substation	Royaltec International	2017
	● Lamphun Substation, Northern Region Industrial Estate	Interlink Communication Public Co., Ltd.	2017
	● 115kv Tranmission Line Mae Hon Son	Eastern Technical Engineering Public Company Limited	2017
Sea Gate	● Siri Plaza	Aka Co., Ltd.	2017
IDEO Ananda Development	● Ideo 02 Bang Na	N.R.Engineering Co., Ltd.	2017
Central	● Central Festival Phuket	Power Line Engineering Public Company Limited	2017
	● Central Mahachai	Elmech Engineering Co., Ltd.	2017
	● Central Nakhon Ratchasima	Inwire Engineering Company Limited	2017
Chulalongkorn University	● Cu Centennial Park	Syntec Construction Public Company Limited	2017
Makro	● Makro Pathumthani	Entecon Company Limited	2017
	● Makro Kalasin	Entecon Company Limited	2017
Thai Government	● Paliament House Of Thailand	Power Line Engineering Public Company Limited	2017
	● Thai Supreme Court Building	Power Line Engineering Public Company Limited	2017
	● Office Of Court Of Justice	Power Line Engineering Public Company Limited	2017
Royal Thai Navy	● Royal Thai Navy Armory	Winning System Engineering Limited Partnership	2017
Mass Rapid Transit	● Mrt Blue Line	Sino-thai Engineering & Construction Public	2017
Authority of Thailand		Company Limited	2017
	● Mrt Green Line	Power Line Engineering Public Company Limited	2017
	● Mrt Red Line	Italian-thai Development	2017
Charoen Pokphand	● Cp Ram Khon Khen	Christiani & Nielsen (Thai) Public Company Limited	2017
Department of Highways	● Motorway Chonburi	Entecon Company Limited	2017
MQDC	● Whizdom Condo Sukhumvit 101	Tri-en Solution Co., Ltd.	2017
Royal Thai Army	● Building 1 - Royal Thai Armed Forces headquarters (RTARF)	Gentrade Engineering Co., Ltd.	2017
Boonthavorn	● Boonthavorn Udon Thani	Demco Public Company Ltd.	2017
Tesco Lotus	● Tesco Lotus Fang District	Boonthavorn Development Co., Ltd.	2017
	● Tesco Lotus Prakhon Chai District	Thanacha Co., Ltd.	2017
IKEA	● Ikea Bang Yai	Prosper Engineering	2017
MEA	● Mea Feeder Remote Terminal Unit (Frtu)	Thai Semcon Co., Ltd.	2017
	● Substation Prawet	Precise Electro-mechanical Works Co., Ltd.	2017
	● Substation Pra Nakorn Tai	Sb Powertech Co., Ltd.	2017
	● Substation Prachachun	Transec Power Services Co., Ltd.	2017
CP ALL	● Cp All Buriram	Klang Faifa Rog-ngan Co., Ltd.	2017
ENSYS	● Biomass Power Plant Ensys	Royaltec International	2017
PEA	● 115kv Transmission Line Rojana, Ayutthaya	N.R.Engineering Co., Ltd.	2017

Remark : The aforementioned project is some of the domestic project references

References

Owner	Project Name	Distributor	Period
Supalai	● Supalai Elite Surawong	Secco Engineering & Construction Co.,Ltd.	2017
	● Supalai Elite Phayathai	Secco Engineering & Construction Co.,Ltd.	2017
	● Supalai Veranda Ratchavipha	Secco Engineering & Construction Co.,Ltd.	2017
	● Supalai Wellington 2	Secco Engineering & Construction Co.,Ltd.	2017
	● Supalai Loft Chaeng Watthana	Secco Engineering & Construction Co.,Ltd.	2017
	● Supalai Elite Phayathai	Secco Engineering & Construction Co.,Ltd.	2017
TESCO LOTUS	● Tesco Lotus Kuchinarai	Prosper Engineering	2017
B.Grimm Power	● 115 Terminal Sub Abpr5	Demco Public Company Ltd.	2017
PEA	● Central Pattaya Substation	Secco H.V. Co Ltd	2017
	● 115kv Khao Mai Kaeo, Chonburi	Demco Public Company Ltd.	2017
TFG	● Tfg-further Product Factory	V Neramit Co., Ltd.	2017
JWS Construction	● The Garden 9 (Lat Krabang)	V Neramit Co., Ltd.	2017
Mae Fah Luang University (Chiang Rai)	● Mae Fah Luang University	Vars Co., Ltd.	2017
	● Bang Kruai Hospital 2	Royaltec International	2017
	● Gymnasium Chitralada School	Italthai Engineering Co., Ltd.	2017
Platinum Market	● The Market By Platinum	First Technology Co., Ltd.	2017
Vietnam	● Thai Binh 1 Thermal Power Plant	Globaltronic Intertrade	2017
AP (THAILAND)	● Aspire Sathorn-ratchapruek	Tri-en Solution Co., Ltd.	2017
	● Aspire Erawan	Prosper Engineering	2017
TAKATA	● Takata Industrial Plant	Bania Engineering Co., Ltd.	2017
Laos	● Hydroelectric Power Nam Ngiep	R C R Co., Ltd.	2017
	● The Saint Residences Vibhavadi Rangsit	Secco Engineering & Construction Co.,Ltd.	2017
Kasemsubsiri 2	● Aec Market Building	Power Line Engineering Public Company Limited	2017
EGAT	● 500 Kv Chaeng Watthana Substation	Demco Public Company Ltd.	2017
	● 500 Kv Transmission Line Chaiyapoom	Demco Public Company Ltd.	2017
Phuket Sirinath Property	● The Terminal Phuket	Engnue Technology Co., Ltd.	2017
EGAT	● Supply Grounding Material	Kumwell	2018
	● Transmission Lines 230kV Chachoengsao 2 - Prachinburi 2	Demco Public Company Limited	2018
	● Transmission Lines 550kV Bang Saphan 2 - Surat Thani 2	Kalpataru Limited	2018
	● Underground Transmission Line 230kV South Bangkok	TEDA Company Limited	2018
	● Transmission Lines 500kV Bang Saphan 2 - Surat Thani 2	Larsen & Toubro Limited	2018
	● 230/115 kV Ao Phai Substation (GIS)	Sinohydro (Thailand) Co., Ltd.	2018
	● Transmission Lines 500kV Ubon Ratchathani 3 - Roi Et 2	RCR	2018
	● Transmission Lines 500kV Bang Saphan 2 - Surat Thani 2	Loxley Public Company Limited	2018
	● Supply of Miscellaneous Equipment Bulk Power Sopply for the Greater Bangkok and Vicinity Area Phase 3	Maclean - Dulhunty Power (Thailand) Limited	2018
EGAT	● 115 kV Phatthalung Substation (GIS)	Italthai Engineering Co., Ltd.	2018
	● South Bangkok Power Plant	Marubeni Corporation	2018
PEA	● Substation Phuket	Siemens	2018
	● 115 kV Substation Songkhla	IGEN Engineering	2018
	● 115/33 kV Hanuman Wind Farm	ABB	2018
	● Sikhiu 3&5 Wind Farm Substation	Grid Solution	2018
GULF	● Gulf Sriracha Substation	Mitsubishi Electric Asia	2019
EGAT	● 500 KV Surat Thani Substation	Larsen &Toubro Limited	2019
	● 230 KV Ao Phai Substation	Sino Hydro	2019
	● Bangpakong Power Plant	Royaltech International	2019
	● 230 KV Khlong Dan Substation	Larsen &Toubro Limited	2019
	● 500 KV Pluak Daeng Substation	KEC International Limited	2019

Remark : The aforementioned project is some of the domestic project references

References

Owner	Project Name	Distributor	Period
SRT	● Bangsue – Rangsit Redline	Italianthai Development	2019
	● Red Line Grand Station	Unique Engineering	2019
MRTA	● Orange Line	Italthai Engineering	2019
	● Green Line	Italianthai Development	2019
ICON SIAM	● Gold Line	Italianthai Development	2019
AOT	● Suvarnabhumi Airport Phase2	Power Line Engineering	2019
AEROTHAI	● VOR / DME Betong Airport	Pornpian Co., Ltd	2019
EGAT	● 500 KV Bang Saphan2 – Surat Thani 2	Uanpataru Power Transmission	2019
	● 230 KV Chatuchak	Globaltronic Intertrade Co.,Ltd.	2019
PEA	● 115 KV Aranyaprathet Substation	Demco Public Company Limited	2019
	● Khlongkhuean Substation	U Services	2019
MEA	● Koto Station & Phraek Sa Station	TEDA Co., Ltd	2019
	● Chandrakasem, SuanSom, Rungpracha Substation	Siemens	2019
EGAT	● EGAT: Saraburi 6 Substation	Italthai Engineering	2019
	● EGAT: 115 KV Khon-Khaen	Italthai Engineering	2019
	● EGAT: Phuket Substation	Italianthai Development	2019
PEA	● LPWP 8.965 Mw (LIGOR Wind Power Plant)	Italthai Engineering	2019
	● 115 / 22 KV Gis Substation	ABB	2019
SUPALAI	● Varenda Phasicharoen	Secco	2019
	● Oriental Sukhumvit 39	Secco	2019
	● Riva Grand	Secco	2019
King Chulalongkorn Memorial Hospital	● Phor Por Ror Building	Quesco	2019
NARAI PROPERTY	● The Parkland Charan - Pinklao	Secco	2019
CP	● CP Tower 2	Syntec	2019
SIGHA	● Sigha Complex	Secco	2019
THAI OIL	● Main Building Sriracha	Prosper Engineering	2019
EGAT	● EGAT TILS-L-02 500kV Thung Song- Songkhla 3 (From Thung Song to KM.105)	Henan Power Transmission & Transformation Construction Company Limited	2021
EGAT	● Egat No.:TILS-L-01 230kV Thung Song (500/230kV)-Thung Song (230/115kV)	SC-ST-BYP Joint Venture Company Limited	2021
PTT	● PTTLNG NFUG	CAZ Thailand Public Company Limited	2021
	● Data Center – Krungsri Bank	Advance Power Line Company Limited	2021
EGAT	● EGAT : IPP3-L-04	Benyapha Power Line Company Limited	2021
	● The Rubber Glove Factory	Tri-En TOENEC Company Limited	2021
	● The Livin Phetkasem (Tower A และ B)	SECCO Engineering & Construction Company Limited	2021
MRTA	● Orange Line	Royaltec International Company Limited	2021
EGAT	● EGAT: BESS	Larsen & Toubro Limited	2021
MEA	● Khlong Dan Departure Station	TEDA Company Limited	2021
EGAT	● Sirindhorn Dam (Ubon Ratchathani)	VARS Company Limited	2021
EGAT	● Pluak Dang Substation	Precise System and Project Company Limited	2021
	● Mars Pet Care Center food Factory	Thai Toko Engineering Company Limited	2021
	● GOODYEAR Factory	Italthai Engineering Company Limited	2021
	● Krungsri Bank (Rama III)	R-CON Engineering Company Limited	2021
	● Supalai Veranda Ramkhamheang	Grand Intersec Company Limited	2021
	● Thai oil Clean Fuel	Probity International Company Limited	2021
	● Solar Farm	IN-QUBIC Company Limited	2021
SRT	● Double Track Railway (Huahin-Prachuabkirikhan)	Italianthai Development Public Company Limited	2021
DOA	● Nakhon Si Thammarat Airport	SIT Engineering System Company Limited	2021

Remark : The aforementioned project is some of the domestic project references

References

Owner	Project Name	Distributor	Period
MEA	● Khlong Dan Departure Station Building	Italthai Engineering Company Limited	2021
Bank of Thailand	● Government Complex Chaengwattana (Zone C)	Power Line Engineering Public Company Limited	2021
MEA	● Khlong Dan Departure Station (Substation)	SINOHYDRO (THAILAND) Company Limited	2021
	● BGPU Training center	TEO HONG PHAISAN Company Limited	2021
EGAT	● EGAT Contract No.S100855-3165-TS12-MC1-10-PRO	Progressive INTER-TRADE Company Limited	2022
EGAT	● EGAT TILS-L-02 500kV Thung Song- Songkhla 3 (From Thung Song to KM.105)	Henan Power Transmission & Transformation Construction Company Limited	2022
EGAT	● Pluak Dang Substation	Precise System and Project Company Limited	2022
EGAT	● EGAT:TILS-L-06 500kV Thung Song-SongKhla 3 230kV Hat Yai 2-Khlong Nage	Precise System and Project Company Limited	2022
	● Terra Data Center2	Italthai Engineering Company Limited	2022
EGAT	● EGAT:500lV Thung Song -Songkhla 3 and 230kV Hat Yai 2-Khlong Ngae to Songkhla 3 Substation TILS-L-06	Kalpataru Power Transmission Limited	2022
	● EM POWER METAL SHEET SAMUTSAKORN Factory	N.R.Engineering Company Limited	2022
	● Queen Sirikit National Convention Center	New Bangkok Electric Company Limited	2022
	● Marriot Courtyard	SECCO Engineering & Construction Company Limited	2022
MRTA	● Orange Line	Royaltec International Company Limited	2022
IRPC	● Fuel Depot (Chumporn)	Royaltec International Company Limited	2022
MRTA	● Purple Line	Royaltec International Company Limited	2022
PEA	● Lampang Substation & Jomthong Substation	RSS 2016 Public Company Limited	2022
GULF	● Hin Kong Power Plant (Ratchaburi)	T.Y.K.(Thailand) Company Limited	2022
MRT	● Blue Line (Extension)	Bangkok expressway and metro (BEM)	2022
	● Submarine Cable	TARNAS Company Limited	2022
	● UCF	Royaltec International Company Limited	2022
	● BTMT	Kinden (Thailand) Company Limited	2022
	● DOW AIE	Globaltronic Intertrade Company Limited	2022
	● MURATA Electronic (Thailand) Company Limited	Globaltronic Intertrade Company Limited	2022
EGAT	● South Bangkok Power Plant (RTS2-S-14)	SINOHYDRO AND SEPCO III Joint Venture	2022
	● THAINAMTHIP Company Limited (Lampang Factory & Rangsit Factory)	N.R.Engineering Company Limited	2022
EGAT	● EGAT Contract No.S100855-3165-TS12-MC1-10-PRO	Progressive INTER-TRADE Company Limited	2022
	● NESIS Rayong Power Plant	4484 Holding Company Limited	2022
	● Terra Data Center2	Italthai Engineering Company Limited	2022
	● CBI-BT color light signaling system, 4 stations	N&N Company Limited	2022
Royal Thai Navy	● Missile testing building and warehouse, Royal Thai Navy	Communication & System Solution Public Company Limited	2022
	● Mega Home Nakhon Pathom	N.R.Engineering Company Limited	2022
	● MTP	Globaltronic Intertrade Company Limited	2022
	● Nestle Korakot PH.2	Thai Kandenko Company Limited	2022
PEA	● 115 KV Hat Yai 4-5 Substation	RSS 2016 Public Company Limited	2022
EGAT	● Krabi Substation	Kumwell Corporation Public Company Limited	2022
	● Building for installing Container ABSL+-3 Capes and systems - Chulalongkorn University (Saraburi)	POKAKIT Construction Company Limited	2022
EGAT	● TIWS-L-04 500kV Bang Saphan 2 Surat Thani 2	STC-BYP Joint Venture	2023
	● (From Bang Saphan 2 To KM.155)		2023
MRTA	● South Purple Line	Italianthai Development Public Company Limited	2023
	● ISUZU Gateway	N.R.Engineering Company Limited	2023
EGAT	● TIEC-L-11 500KV (Tha Tako - Sam Khok)	DEMCO Public Company Limited	2023
	● EGAT : 500kV Tha Tako-Sam Khok L-11	Larsen & Toubro Limited	2023

Remark : The aforementioned project is some of the domestic project references

References

Owner	Project Name	Distributor	Period
EGAT	● EGAT:500lV Thung Song -Songkhla 3 and 230kV Hat Yai 2- ● Khlong Ngae to Songkhla 3 Substation TILS-L-06	Kalpataru Power Transmission Limited	2023
Royal Thai Army	● Royal Thai Army Auditorium	Royaltec International Company Limited	2023
EGAT	● Contract : W100841-4165-TILS-L-06	Precise System and Project Company Limited	2023
EGAT	● TIPN-L-03 500kV Mae Moh 3 - Lamphun 3 (From KM.76 to Lamphun 3)	Benyapha Power Line Company Limited	2023
	● Terra Phase3	Italthai Engineering Company Limited	2023
DOA	● Nakhon Si Thammarat Airport	N.R.Engineering Company Limited	2023
ACG	● ACG CAPSULE PLAN RAYONG Utility Building	Power Line Engineering Public Company Limited	2023
GULF	● Pluak Dang Power Plant	T.Y.K.(Thailand) Company Limited	2023
ISUZU	● ISUZU	Globaltronic Intertrade Company Limited	2023

Remark : The aforementioned project is some of the domestic project references

References

Owner	Project Name	Distributor	Period
OMAN	● Al Kamil Power Plant	Gulf Radiant Electrical & Trading L.L.C.	2001 - 2002
U.A.E	● Dewa Project	Gulf Radiant Electrical & Trading L.L.C.	2001 - 2002
	● Adwea Project	Gulf Radiant Electrical & Trading L.L.C.	2001 - 2002
INDIA	● Purula-hydro Power Plant	Taisei Corporation	2003
QATAR	● Qatar Petroleum Gas	Gulf Radiant Electrical & Trading L.L.C.	2003
SUDAN	● Melut Basin Oil	Gulf Radiant Electrical & Trading L.L.C.	2003
INDIA	● Purula-hydro Power Plant	Taisei Corporation	2003 - 2004
VIETNAM	● Binh Trieu-hcm 110KV, Phu Tho-hcm 110KV	V.T.E.C.H. Electrical Technology Co.,Ltd.	2004
CHINA	● Shanghai Power Plant	Nova Technology Co.,Ltd.	2004
PAKISTAN	● Lpg Extraction Plant	ABB PVT.Ltd	2004
	● 500KV/220 Ntoc-kekc	Pacific Engineering Co.,Ltd.	2005
MALAYSIA	● 500KV T/l Transmission Lines For 1400mw Jimah Power Project	Fujikura Ltd.	2005
LAOS	● Nam Theun 2 Hydro Power Project Em2 Transmission Line	J-Power System Corporation	2005
VIETNAM	● Cu Mau Combine Cycle Power Plant Petro	V.T.E.C.H. Electrical Technology Co.,Ltd.	2006 - 2007
CHINA	● Shantou 500KV Substation	Nova Technology Co.,Ltd.	2007
	● Shi Hua Yang Zhuang River Project	Nova Technology Co.,Ltd.	2008
MALAYSIA	● Hospital Petronas (Klcc Health Care Center)	Hellerman Letrik Sdn. Bhd.	2008
	● Kuala Lumpur International Airport (Klia)	Hellerman Letrik Sdn. Bhd.	2008
	● Cu Mau Combine Cycle Power Plant Petro	Hellerman Letrik Sdn. Bhd.	2008
	● Maxis Telecom Malaysia	Hellerman Letrik Sdn. Bhd.	2008
PAKISTAN	● Gas Turbine Power Plant	Pacific Engineering Co.,Ltd.	2008
U.A.E	● Dewa-d.f.o. Pipeline	Gulf Radiant Electrical & Trading L.L.C.	2009
	● Abu-dhabi International Airport 2k Runway Project	Gulf Radiant Electrical & Trading L.L.C.	2009
	● Du Telecom Tower Civil Works	Gulf Radiant Electrical & Trading L.L.C.	2009
EGYPT	● Ezz-steel Plant, Suez	DANIELI	2009
IRAQ	● Us Army Jlsc-doha, Project Iraq/afghanistan	Gulf Radiant Electrical & Trading L.L.C.	2009
	● Pier & Seawall Project, Umm Qasr, Basra-iraq	CCI Inc.	2009
VIETNAM	● Main Gas Filling Station	V.T.E.C.H. Electrical Technology Co.,Ltd.	2009
CHINA	● Yinnan Province Xiao Wan Hydro-power Plant	Nova Technology Co.,Ltd.	2009
	● Shangdong Province Dezhou 500 KV Substation	Nova Technology Co.,Ltd.	2009
INDONESIA	● Sengkang		2008
TRINIDAD AND TOBAGO	● Brechin Castle Substation	Petrotrin, Petroleum Company of Trinidad and Tobago Limited.	2010
	● EPC Refinery Substation Project : 2312	Petrotrin, Petroleum Company of Trinidad and Tobago Limited.	2010
VIETNAM	● Da Nang Internation Airport-danang City	CNA-HTE / Middle Airports Corporation-MAC	2010
COLOMBIA	● Santa Marta Substation Project 2365	HMV Ingenieros Ltda	2010
	● LLC Barrancabermeja-el Centro, Oil Industrial Complex	Occidental De Colombia Inc.	2010 - 2013
INDONESIA	● Tanjung Tabalong		2011
COLOMBIA	● Pacific Rubiales Corporation Oil Industrial Complax.	CAM Colombia (Compania Americana De Multiservicios)	2011 - 2012
VENEZUELA	● Tocoma Hidroelectric Project (2000 Mva) Rio Caroni Pto. Ordaz	Consorcio Oiv Tocoma Odebrecht - Imoregilo - Vincler	2011 - 2013
INDONESIA	● KDL 120mw Combined Cycle Power Plant Project	Kratatau Daya Listrik	2013
LAO PDR	● Nong Deun - Seno - Meuang Phine 115KV Transmission Project	China-East Resources Import & Export Co.	2014 - 2016
	● Xayaburi Hydroelectric Power Project : Package 4 : 500KV Transmission Line	China-East Resources Import & Export Co.	2014 - 2016
SINGAPORE	● Exxon	Alstom Grid Pte Ltd (Singapore)	2016

Remark : The aforementioned project is some of the international project references

References

Owner	Project Name	Distributor	Period
MYANMAR	● Ese Project	Arkarthit Enterprise Co.,Ltd.	2014 - 2016
	● Mepe Project	Arkarthit Enterprise Co.,Ltd.	2014 - 2016
	● 66KV Kyaukphyu Substation Switchbay	Arkarthit Enterprise Co.,Ltd.	2015
	● 66/11KV, 10 Mva Kyaukkayate Substation	Arkarthit Enterprise Co.,Ltd.	2015
	● 230KV Switchbay Extension At Thaketa Substation	Arkarthit Enterprise Co.,Ltd.	2015
	● 66/11KV, 5 Mva Shardaw Substation	Arkarthit Enterprise Co.,Ltd.	2015
	● 66KV Moegoke Ss Switchbay	Arkarthit Enterprise Co.,Ltd.	2015
VIETNAM	● Ha Noi Metro Project	V.T.E.C.H. Electrical Technology Co.,Ltd.	2015
	● Nghi Son Refinery Project	V.T.E.C.H. Electrical Technology Co.,Ltd.	2015-2016
MYANMAR	● Mandalay Project	Arkarthit Enterprise Co.,Ltd.	2016
	● Mawlamying Ss Extention	Arkarthit Enterprise Co.,Ltd.	2016
	● 43T / MEPE (PTP)	Arkarthit Enterprise Co.,Ltd.	2016
	● New Life Myanmar Hotel Project	Arkarthit Enterprise Co.,Ltd.	2016
BANGLADESH	● 230 KV Extension In Existing 230/132 Kv Substation At Khulna South On Turnkey Basis	N.R. Engineering Co.,Ltd.	2016
LAO PDR	● Xe Namnoy And Xe Katam Hydropower Project	B.Grimm Power Public Company Limited	2016
INDONESIA	● Jawa 2 Coal Fired Power Plant	PT. Promindo	2016
	● Kalsel-1 Coal Fired Power Plant	PT. Raj Prima	2016
PAKISTAN	● K Electric Rehabilation (Tp100 Project)	Siemens	2016
	● PABCL Project	Descon	2016
VIETNAM	● Npk Phu My Power Plant Project	V.T.E.C.H. Electrical Technology Co.,Ltd.	2016
	● Nestle Hung Yen Project	V.T.E.C.H. Electrical Technology Co.,Ltd.	2016
	● Thai Binh 1 Thermal Power Plant	V.T.E.C.H. Electrical Technology Co.,Ltd.	2016
	● "Ground Improvement : 220kV & 500kV Transmission Tower of PTC1 & PTC2"	V.T.E.C.H. Electrical Technology Co., Ltd.	2016-2017
	● Metro Linie Nhon - Ha Noi Station	V.T.E.C.H. Electrical Technology Co., Ltd.	2017
INDONESIA	● Lumut Balai Geo Thermal	PT.Raj Prima	2017
	● Solar Photovoltaic Electricit	PT.Raj Prima	2017
	● 150kV Bekasi Substation	PT.Raj Prima	2017
	● Tangguh Expension Project	PT.Raj Prima	2017
	● Petrokimia Butadiene Indonesia Extraction Plant	PT.Raj Prima	2017
	● 150kV BSD Substation	PT.Raj Prima	2017
	● 150kV Pasar Kermis Substation	PT.Raj Prima	2017
	● PLTMG Package 4 Project	PT.Raj Prima	2017
	● Kalsel 1- CFPP Project Power Plant	PT.Raj Prima	2017
	● MRT Jakarta Project	PT.Raj Prima	2017
	● PLTMG Package 3 Project	PT.Raj Prima	2017
	● Lumut Balai Geo Thermal - 2nd MTO	PT.Raj Prima	2017
MYANMAR	● 51T / MEPE (PTP) - AMM	Arkarthit Enterprise Co., Ltd.	2017
	● Boxpak Factory Project - CAM	Arkarthit Enterprise Co., Ltd.	2017
	● Shan State Project - MPD	Arkarthit Enterprise Co., Ltd.	2017
MALAYSIA	● Muram to Samalaju 2 - 275kV Transmission Line Project - SEB	KEC Internation Limited	2017
BANGLADESH	● 230/132kV GIS Dhamrai - Shampur PGCG	Siemens Limited	2017
DUBAI, UAE	● TAKREER ADH	Gulf Radiant Electrical & Trading L.L.C.	2017
VIETNAM	● COCOBAY	V.T.E.C.H. Electrical Technology Co., Ltd.	2017
	● Cam Ranh International Airport	V.T.E.C.H. Electrical Technology Co., Ltd.	2017
	● THE ESTELLA HEIGHTS - PHASE 2	V.T.E.C.H. Electrical Technology Co., Ltd.	2017-2018
PAKISTAN	● Zorlu OFS T-3428	Siemens Pakistan Engineering Co., Ltd.	2017-2018

Remark : The aforementioned project is some of the international project references

References

Owner	Project Name	Distributor	Period
PAKISTAN	● KETP 1000	Siemens Pakistan Engineering Co., Ltd.	2017-2018
	● DABS 010	Siemens Pakistan Engineering Co., Ltd.	2017-2018
	● CEL - Chanar	Siemens Pakistan Engineering Co., Ltd.	2017-2018
VIETNAM	● FIRST SOLAR - PHASE 2	V.T.E.C.H. Electrical Technology Co., Ltd.	2017-2018
	● METRO LINE BEN THANH - SUOI TIEN	V.T.E.C.H. Electrical Technology Co., Ltd.	2017-2018
	● RIVIERA POINT - PHASE 1B	V.T.E.C.H. Electrical Technology Co., Ltd.	2017-2018
	● Vinh Tan 4 Thermal Power Plant	V.T.E.C.H. Electrical Technology Co., Ltd.	2018
	● Heineken Vietnam Brewery - Da Nang	V.T.E.C.H. Electrical Technology Co., Ltd.	2018
	● Long Phu 1Thermal Power Plant - OUTDOOR BAY	V.T.E.C.H. Electrical Technology Co., Ltd.	2018
	● LDS System Renting Service for PTC1	V.T.E.C.H. Electrical Technology Co., Ltd.	2018
INDONESIA	● KALSELTENG-2 COAL FIRED STEAM POWER PLANT	PT.Raj Prima	2018
	● CAP NPE	PT.Raj Prima	2018
	● 500kV Delta Mas Substation	PT.Raj Prima	2018
	● 150kV Sinar Sahabat Substation	PT.Raj Prima	2018
	● 150kV Pandaan Baru Substation	PT.Raj Prima	2018
	● 150kV Sukatani Extension Substation	PT.Raj Prima	2018
	● 150kV Nganjuk II Substation	PT.Raj Prima	2018
	● PLTMG Package 3 Project - Extension	PT.Raj Prima	2018
	● PLTMG Package 4 Project - Extension	PT.Raj Prima	2018
MYANMAR	● 46T/MEPE (PTP) - FSI	Arkarthit Enterprise Co., Ltd.	2018
	● Private Project - CAM	Arkarthit Enterprise Co., Ltd.	2018
	● LV-047 LP2 PROJECT - CAM	Arkarthit Enterprise Co., Ltd.	2018
	● EE-032 PROJECT - CAM	Arkarthit Enterprise Co., Ltd.	2018
	● Nestle Factory Project - KKST	Arkarthit Enterprise Co., Ltd.	2018
	● YGN-MDY Railways Improvement Project - BFE	Arkarthit Enterprise Co., Ltd.	2018
	● 43T/MEPE (PTP)_Mawlamying SS Extension - MPS	Arkarthit Enterprise Co., Ltd.	2018
	● Thilawa Project - KST	Arkarthit Enterprise Co., Ltd.	2018
	● Myanmar Beer Factory Project - PKM	Arkarthit Enterprise Co., Ltd.	2018
	● EAC Soft Drink Factory Project - ERC	Arkarthit Enterprise Co., Ltd.	2018
MYANMAR	● 66kV Kalewa-Mawleik TL/18-19 (16.7 Miles) -ZLE	Arkarthit Enterprise Co.,Ltd.	2018-2019
BANGLADESH	● Augmentation & Rehabilitation of 33KV GIS Switchgears at Tongi 230/132/33KV Grid Sub-Station	Siemens Bangladesh Ltd.	2019
INDONESIA	● MULTIFAB GI 150kV AMPEL	PT. RAJ Prima	2019
	● IKPT-AYNI005 NSI i-III	PT. RAJ Prima	2019
	● GI MUARA WAHAU	PT. RAJ Prima	2019
	● Muara Karang Power Station	PT. RAJ Prima	2019
PAKISTAN	● Naveena Steel Mills Project	Pacific Engineering	2019-2020
	● Sahiwal 220kV Grid Stations	Pacific Engineering	2019-2020
	● Sahiwal 500kV Grid Stations	Pacific Engineering	2019-2020
MYANMAR	● Private Project/19-20 - TTM	Arkarthit Enterprise Co.,Ltd.	2019-2020
	● Private Project/2019-20-ERL	Arkarthit Enterprise Co.,Ltd.	2019-2020
	● PTTEP Myanmar Project/2019-20 - OSES	Arkarthit Enterprise Co.,Ltd.	2019-2020
	● Makro Myanmar Project 19-20 -NLM	Arkarthit Enterprise Co.,Ltd.	2019-2020
	● Peninsula Hotel Yangon Project/2019-2020	Arkarthit Enterprise Co.,Ltd.	2019-2020
INDONESIA	● MULTIFAB GI 150kV ULEE KARENG	PT. RAJ Prima	2020
PHILIPPINE	● BESS PHILIPPINES (1)	PT. RAJ Prima	2020
DUBAI	● DEWA IV 700MW CSP	Gulf Radiant Electrical & Trading LLC	2019-2020
	● DEWA 132/11kV Substation	Gulf Radiant Electrical & Trading LLC	2020

Remark : The aforementioned project is some of the international project references

References

Owner	Project Name	Distributor	Period
VIETNAM	● VIETTEL,LILAMA 18.1	V.T.E.C.H. Electrical Technology Co.,Ltd.	2021
	● THANG TIEN, HAWEE, KD VIETNAM,THONG TRUNG THINH	V.T.E.C.H. Electrical Technology Co.,Ltd.	2021
	● COCOBAY DA NANG CITY	V.T.E.C.H. Electrical Technology Co.,Ltd.	2021
	● TOAN DANH; HUA MINH TAM, LILAMA; AC-03 CEMEP	V.T.E.C.H. Electrical Technology Co.,Ltd.	2021
	● VEEC, GS,DELTA,VIETTEL, NSN HN	V.T.E.C.H. Electrical Technology Co.,Ltd.	2021
	● TRUNG NAM WIND POWER PLANT	V.T.E.C.H. Electrical Technology Co., Ltd.	2021
	● WIND POWER PLANT	V.T.E.C.H. Electrical Technology Co., Ltd.	2021
MALAYSIA	● F-052 2SP PASIR, GUDANG, MALAYSIA	TTCL PUBLIC COMPANY LIMITED	2021
SRI LANKA	● ISD-HIMALEE N	ROTAX (PVT) LTD.	2021
	● CEB - WAGAWATTA GRID STATION	ROTAX (PVT) LTD.	2021
INDONESIA	● PT.OAKTECH NUSANTARA	PT Raj Prima	2021
	● PT. GANDIVA INFINITY KARYA (JGC MARUNDA 2.0 BEKASI)	PT Raj Prima	2021
	● 150KV KTT MNA SUBSTATION	PT Raj Prima	2021
	● PT. PRIMA POWER NUSANTARA GI 150KV CIKUMPAY	PT Raj Prima	2021
	● PT.WERSA MULTI INTERNASIONAL PROJECT: SHELL MARUNDA	PT Raj Prima	2021
	● GI 150 kV SANDAI	PT Raj Prima	2021
	● SMK-GI 150kV Maloy	PT Raj Prima	2021
HONGKONG	● COMPLEXO DE CUIDADOS DE SAUDE DAS ILHAS-HOSPITAL	NOVA TECHNOLOGY COMPANY. LTD.	2021
MALAYSIA	● BUNUT TO MEDAMIT 275KV TRANSMISSION LINE PROJECT	KEC INTERNATIONAL(MALAYSIA) Sdn Bhd	2021
SINGAPORE	● CHANGI EAST AIR-BASED	HENG HARDWARE ENGINEERING PTE LTD	2021
UAE	● ADNOC-AD / IRAQ	GULF RADIANT ELECTRICAL & TRADING LLC.	2021
	● FEWA FUJAIRAH F3 IPP	GULF RADIANT ELECTRICAL & TRADING LLC.	2021
	● DEWA	GULF RADIANT ELECTRICAL & TRADING LLC.	2021
	● FEWA	GULF RADIANT ELECTRICAL & TRADING LLC.	2021
MYANMAR	● 3T/YESC/2021 & 5T/YESC/20-21	Arkarthit Enterprise	2021
LAOS	● SUVANAKHET UNIVERSITY NEW CAMPUS	3S SDC CIVIL & ELECTRIC CO.LTD	2021
HONGKONG	● COLOMBO CITY PORT DEVELOPMENT	NOVA LPS ENGINEERING COMPANY LIMITED	2021-2022
UAE	● ETIHAD RAILWAY	GULF RADIANT ELECTRICAL & TRADING LLC.	2021-2022
INDONESIA	● PT.OAKTECH NUSANTARA	PT Raj Prima	2022
UAE	● AGOGO SUBSTATION, GHANA	GULF RADIANT ELECTRICAL & TRADING LLC.	2022
	● HITACHI CIVIL WORKS	GULF RADIANT ELECTRICAL & TRADING LLC.	2022
	● KUWAIT PETROLEUM	GULF RADIANT ELECTRICAL & TRADING LLC.	2022
INDONESIA	● GI 150kV MALOY	PT Raj Prima	2022
UAE	● AL DHAFRAH - PV INDEPENDENT POWER PROJECT - ABU DHABI	GULF RADIANT ELECTRICAL & TRADING LLC.	2022
	● AL DHAFRAH-UAE	GULF RADIANT ELECTRICAL & TRADING LLC.	2022
HONGKONG	● GUANGZHOU STOCK	NOVA TECHNOLOGY COMPANY. LTD.	2022
INDONESIA	● SALAK	PT Raj Prima	2022
VIETNAM	● VUPHONG, TAN THANHAN,LAGUNA,VIETTEL	V.T.E.C.H Electrical Technology Co. Ltd.	2022
CAMBODIA	● NOVOTEL	N.R ENGINEERING CO., LTD	2022
VIETNAM	● THANH TAM,VO PHAN LE; TAN THANH AN,VIETTEL, AC03	V.T.E.C.H Electrical Technology Co. Ltd.	2022
	● VIETTEL	V.T.E.C.H Electrical Technology Co. Ltd.	2022
VIETNAM	● NESTLE	V.T.E.C.H Electrical Technology Co. Ltd.	2022
CAMBODIA	● ECOMALL	N.R ENGINEERING CO., LTD	2022
PAKISTAN	● 500KV PAKISTAN (TLM-10-2020)	MOSDORFER GMBH	2022
MYANMAR	● 500KV TRANSMISSION LINE PROJECT 20-21	Arkarthit Enterprise	2022-2023
	(HLAING THAR YAR-PHAYARGYI)		2023
	● EARTHING MATERIALS_C-98 PROJECT- SMA & RETAIL #38-AKT	Arkarthit Enterprise	2023
INDONESIA	● PT.PROMINDO MAKMUR ABADI	PT Raj Prima	2023

Remark : The aforementioned project is some of the international project references

References

Owner	Project Name	Distributor	Period
CAMBODIA	● CBC	N.R ENGINEERING CO., LTD	2023
SRI LANKA	● Stock Project	ROTAX (PVT) LTD.	2023
VIETNAM	● NEO ADVANCE; EMC; NTD	V.T.E.C.H. Electrical Technology Co.,Ltd.	2023
ARGENTINA	● Argentina MDA Lithium	NOVA LPS ENGINEERING COMPANY LIMITED	2023
VIETNAM	● LILAMA;MEPAC	V.T.E.C.H. Electrical Technology Co.,Ltd.	2023
CAMBODIA	● Stock Project	LIUMENG SUPPLY OF M&E MATERIALS LTD.	2023
	● OJI Factory	N.R ENGINEERING CO., LTD	2023
VIETNAM	● NEO	V.T.E.C.H. Electrical Technology Co.,Ltd.	2023
PHILIPPINES	● Stock Project	PRISMA ELECTRICAL CONTROLS CORP.	2023
CAMBODIA	● AIRPORT PHNOM PENH	N.R ENGINEERING CO., LTD	2023
INDONESIA	● PT. MERCURY TEKINDO INTERNUSA	PT Raj Prima	2023
VIETNAM	● LDCT HCM	V.T.E.C.H. Electrical Technology Co.,Ltd.	2023
UAE	● ABU DHABI / ADNOC	GULF RADIANT ELECTRICAL & TRADING LLC.	2023
INDONESIA	● JASA EPC PEMBANGUNAN GARDU INDUK 150KV UNTUK PENYAMBUNGAN TENEGA LISTRIK PLN KE UBPN KOLAKA	PT Raj Prima	2023
HONGKONG	● CMI Project	NOVA TECHNOLOGY COMPANY. LTD.	2023
VIETNAM	● NHON TRACH 3-4 POWER PLANT	V.T.E.C.H. Electrical Technology Co.,Ltd.	2023
	● MEPAC;SALA	V.T.E.C.H. Electrical Technology Co.,Ltd.	2023

CHINA : 6100 MW YANGJIAN NUCLEAR POWER PLANT



DUBAI : BARZAN ONSHORE FACILITIES PROJECT IN RAS LAFFAN, QATAR



VENEZUELA : TOCOMA HIDROELECTRIC PROJECT (2000 MVA) RIO CARONI PTO. ORDAZ



THAILAND : PTT GASSEPARATION PLANT



COLOMBIA : CENTRAL 20MW EPM-EPC SE MALENA SUBSTATION 230 kV



MALAYSIA : KUALA LUMPER INTERNATIONAL AIRPORT - KLIA (MALAYSIA)



VIETNAM : 500KV TAN DINH - SONG MAY POWER LINE



INDIA : INDIA RAILWAYS



THAILAND : 230/500kV, PLUAK DAENG ELECTRICITY GENERATING AUTHORITY OF THAILAND, (EGAT)



CHINA : HIGH SPEED TRAIN



Index

ABS Inspection Pit	42
Accessories	68
Adhesive	69
Adhesive Base	67
Adjustable Saddle	56
Air Terminal Bracket	53
Air Terminals Tip	52
Annealed Copper-Clad Steel Wire	83
Anti-Vandal Down Conductor Guard	75
Back Holdfast	62
Back Plate Holdfast	61
Bi-Metallic Connector	61
Blunt End Air Terminal	49
Blunt End Air Terminal (Height ≥1.5 m.)	50
Cable Cross Clamp	58
Cable Grid	30
Cable Support	58
Cable Support for KHV	87
Cable Support for KIC	85
Cable Test Connector	35
Cable to Tape	59
Cable-Tape Test Connector	35
Circular Conductors	80-81
Circular Conductors Holders	66
Clamp A Cable to Flat Bar	28
Clamp Two Cable to Flat Bar	28
Concrete Inspection Pit	43-44
Conductor Bender	82
Conductor Straightener	82
Conductor Straightener with electric drive	82
Conductor to Rebar Clamp	62

Index

Connector Screw Type	32
Copper - bonded Ground Rod - Standard series	7-9
Copper - bonded Ground Rod - Thread series	10-12
Copper - bonded Ground Rod - TIS series	6
Copper C-Clamp	96-97
Copper Earthing Electrode Water Sealing Glands	45
Copper Lug for Exothermic Welding	88
Copper Lugs	95
Copper Lugs 1-Hole	89
Copper Lugs 2-Hole	90-91
Copper Lugs 4-Hole	94
Copper Lugs One-Hole Long Barrel 90° Pad	92
Copper Lugs Two-Hole Long Barrel 90° Pad	93
Coupling	13
Coupling for Solid Copper / Stainless Steel Ground Rod	15
Cross Cable Saddle	56
Domestic Project Reference	106-111
Double Base Saddle	55
Driving Head	13
Driving Head for Solid Copper / Stainless Steel Ground Rod	15
Earth Boss	32
Earth Point	31
Electrolytic Grounding - KEG	17
Elevation Air Terminals for Air Terminal Tip	52
Equipotential Bonding Bar	40
Expansion Braid Bond	33
Eye Bolt	32
Flat Saddle	55
Flexible Copper Braid Bond	33
Floor Saddle	57
Ground Bar (Disconnecting Link)	38

Index

Ground Bar (For Bonding and Equipotential)	40
Ground Bar (Main Ground Station)	39
Ground Bar (Single Disconnecting Link)	37
Ground Bar (Telecommunication / Communication Ground Station)	39
Ground Bar (Twin Disconnecting Link)	37
Ground Bar (Without Disconnecting Link)	38
Ground Bar Pit	45
Ground Clamp	30
Ground Plate - Copper - Bonded Steel	18
Ground Plate - Lattice Copper	18
Ground Plate - Solid Copper	18
Ground Rod Driving Hammer	16
Ground Rod Electric Driving Hammer	16
Ground Rod Seal	46
Ground Rod Solid Copper / Stainless Steel	14
Grounding Test Box	34
Heavy high-Grade Polypropylene Inspection Pit	46
High Voltage Insulating Down Conductor Cable (KHV)	87
Horizontal MEG Electrode	23
Hydraulic Crimping Tool	98
Index	118-122
Insulating Cable (KIC)	85
Insulator Support	67
International Project Reference	112-116
Introduction to Conductor	76
Introduction to Ground Bar	36
Introduction to High Voltage Insulating Down Conductor Cable (KHV)	86
Introduction to Innovation	99-105
Introduction to Inspection Pit	41
Introduction to Kumwell Insulating Cable (KIC)	84
Introduction to Lightning Pole	70

Index

Introduction to Ground Rod	1-5
Introduction to Metal Sheet Clamp	73
Introduction to More Effective Grounding - MEG	20-21
Lightning Pole	71
Metal Sheet Clamp	74
More Effective Grounding - MEG	22
Multi Point Air Terminals	51
Non Metallic DC Clips	67
One Cable to Pipe Clamp	29
One Hole Cable Grip	59
Pipe Bond Clamp	29
Pipe to Cable Clamp	27
Puddle Flange	53
Pyramid Holdfast	66
Q-Connector	65
Rebar Clamp Connector with Shear Bolt	63
Rod or Pipe to Three Cable Clamp	26
Rod or Pipe to Two Cable Clamp	26
Rod to Cable Clamp	24
Rod to Cable Clamp	25
Rod to Cable Lugs Clamp	24
Rod to Tape Clamp	24
Roof Holders	75
Round and Tape Connector	65
Round Saddle	54
Self - Standing Lightning Pole (Hot Dip Galvanized)	72
Shear Bolt Connector	63
Shield for KIC	85
Signal Reference Ground Grid	19
Solvent Cleaning	69
Spike	15

Index

Split Bolt	62
Square Tape Clamp	65
Square Tape Support	60
Static Earth Receptacle	30
Static Earth Reels	47
Static Earth Reels with Monitor and Remote Interlock Controlled	48
Stranded Copper Conductor	83
Strike Pad	53
Tape Clamp	29
Tape Clip	59
Tape Clip with Adhesive Base	66
Tape Conductors	77-79
Tape Lug Connector	65
Tape Saddle	54
Tape Support	60
Tape Support (LPS)	64
Tape Test Connector	35
Tee Clamp	58
Terminal for KHV	87
Terminal for KIC	85
Terminal Lug	62
Tip	13
U Bolt Rod Clamp	27
Universal Connector	63
Universal Saddle	54
Vertical MEG Electrode	23
Wall Saddle	57
Z-Connector	64



"CSV-Safety to Society"

Kumwell Brand

@kumwell

www.kumwell.com

Kumwell Corporation Public Company Limited
358 Liang Mueang Nonthaburi Road, Bangkrasor, Mueang Nonthaburi District, Nonthaburi 11000 Thailand

Tel : (662) 954-3455
Fax : (662) 591-7891

e-mail : Info@kumwell.com
www.kumwell.com



"CSV-Safety to Society"

Kumwell Brand

@kumwell

www.kumwell.com

Kumwell Corporation Public Company Limited
358 Liang Mueang Nonthaburi Road, Bangkrasor, Mueang Nonthaburi District, Nonthaburi 11000 Thailand

Tel : (662) 954-3455
Fax : (662) 591-7891

e-mail : Info@kumwell.com
www.kumwell.com